US006896224B1

(12) **United States Patent**
Goodwin

(10) **Patent No.: US 6,896,224 B1**
(45) **Date of Patent: May 24, 2005**

(54) **APPARATUS AND METHOD FOR MITIGATING TOE STRIKE IN AIRCRAFT**

(75) Inventor: **John L. Goodwin**, Fairfax Station, VA (US)

(73) Assignee: **The United States of America as represented by the Secretary of the Navy**, Washington, DC (US)

(*) Notice: Subject to any disclaimer, the term of this patent is extended or adjusted under 35 U.S.C. 154(b) by 0 days.

(21) Appl. No.: **10/807,577**

(22) Filed: **Mar. 18, 2004**

(51) **Int. Cl.**[7] **B64C 1/10**

(52) **U.S. Cl.** ..... **244/121**; 244/122 A; 244/122 AG; 280/732 B

(58) **Field of Search** ..... 244/122 A, 121, 244/122 AG; 280/732

(56) **References Cited**

U.S. PATENT DOCUMENTS

4,508,294 A		4/1985	Lorch	244/122
5,547,149 A		8/1996	Kalberer et al.	244/121
5,558,300 A		9/1996	Kalberer et al.	244/121
5,692,710 A	*	12/1997	Gee, Sr.	244/118.5
6,422,512 B1		7/2002	Lewis et al.	244/121
6,471,242 B2	*	10/2002	Schneider	280/732

* cited by examiner

Primary Examiner—J. Woodrow Eldred
(74) *Attorney, Agent, or Firm*—Fredric Zimmerman

(57) **ABSTRACT**

A method for mitigating toe strike in a cockpit of an aircraft includes providing an airbag module attached to an instrument console located in the cockpit of the aircraft; releasing an airbag from the airbag module after an ejection sequence begins; using the airbag to protect a pilot's lower limbs from striking the instrument console as the pilot begins ejecting.

11 Claims, 5 Drawing Sheets

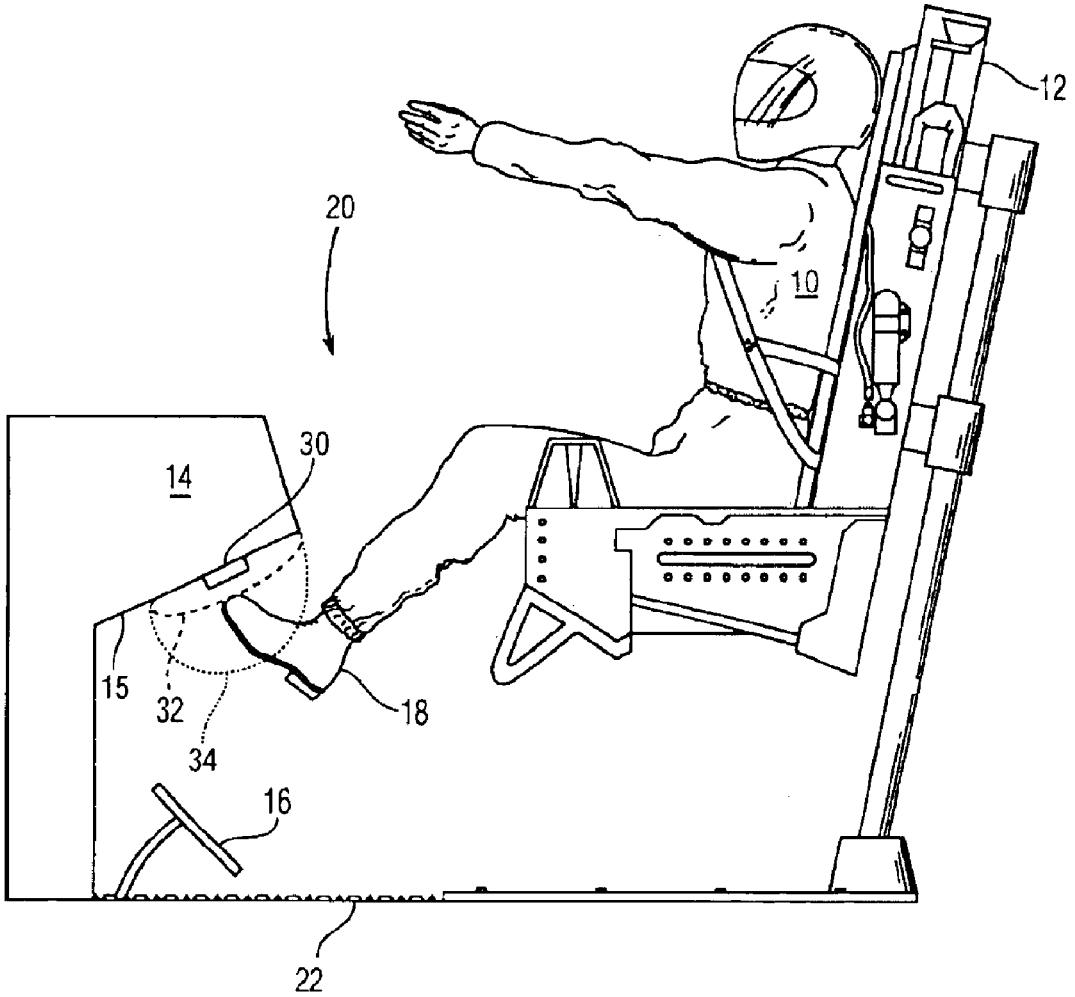

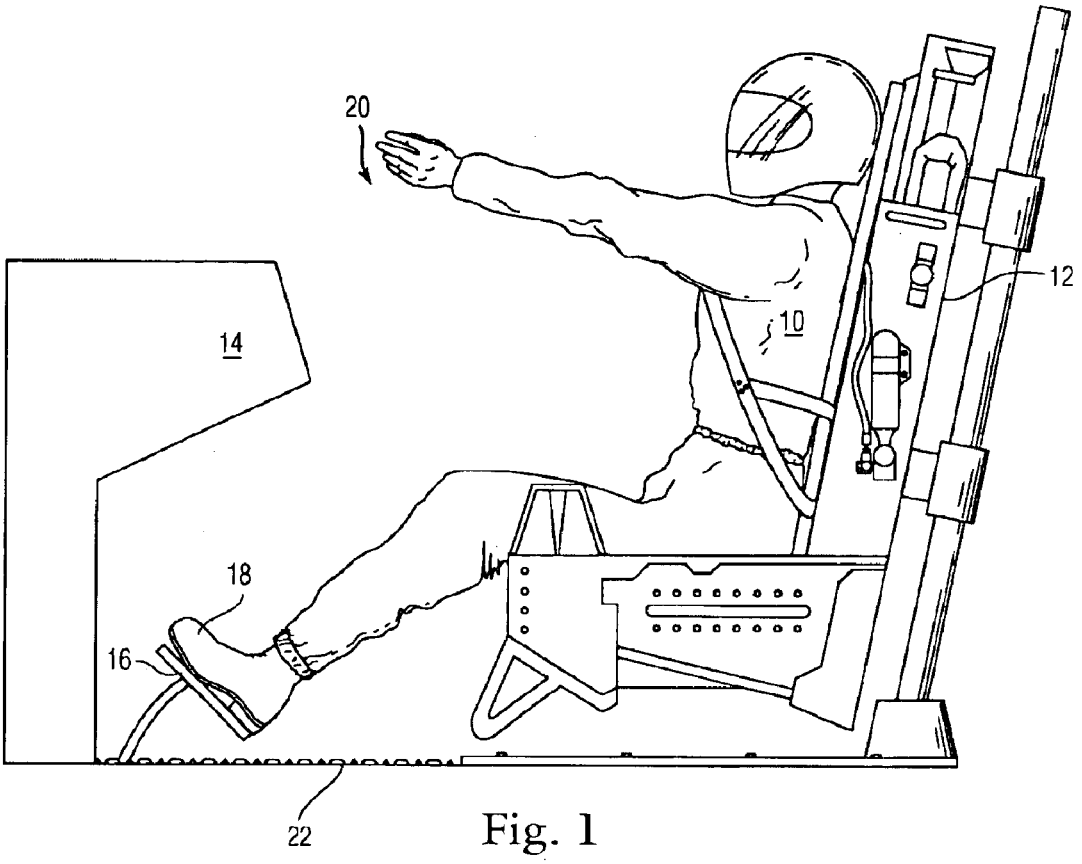

Fig. 1

Fig. 2

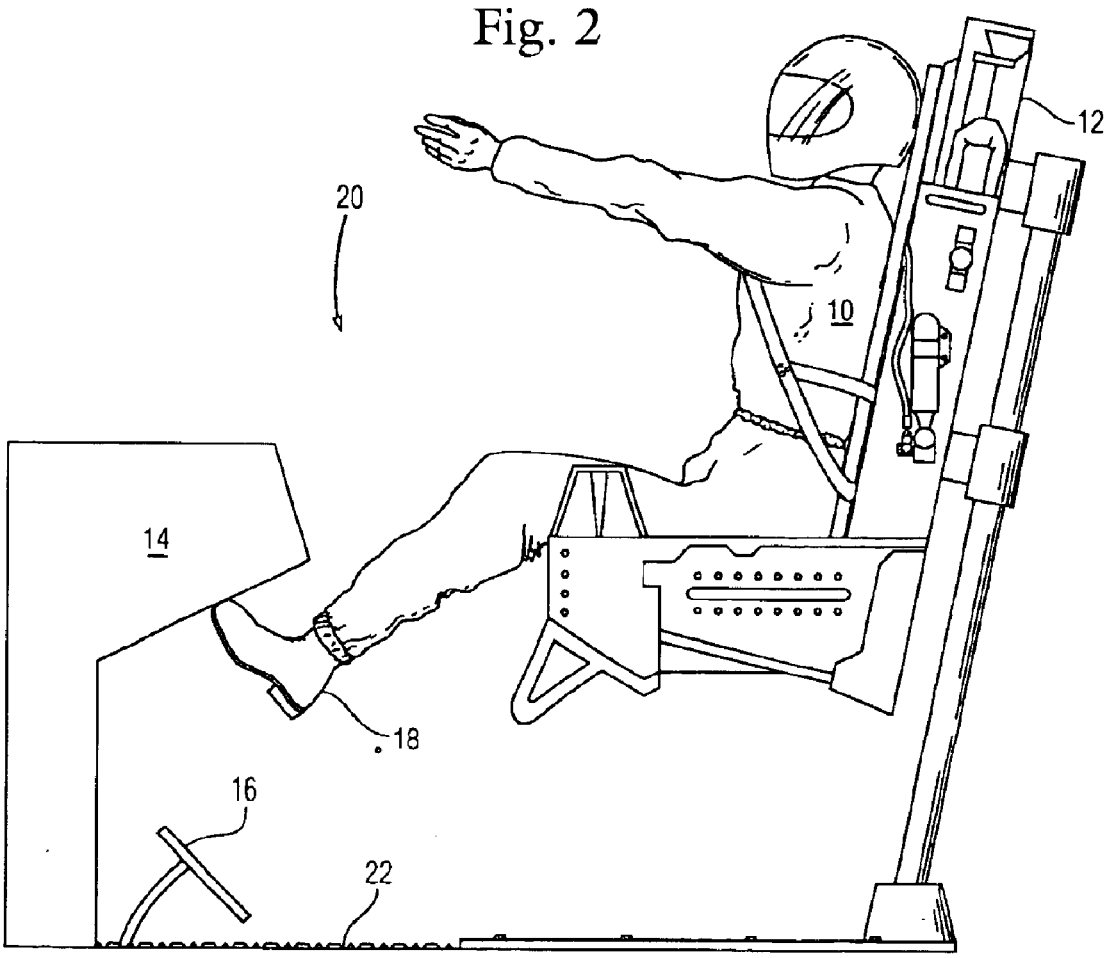

Fig. 3

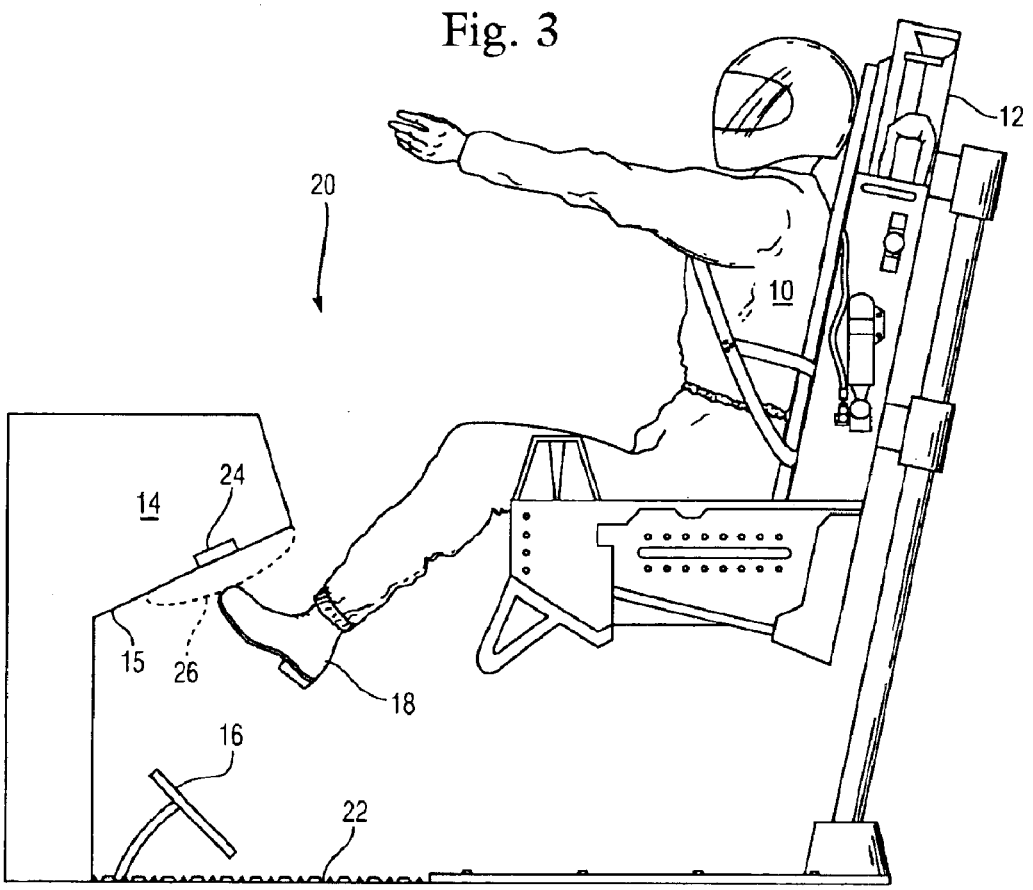

Fig. 4A

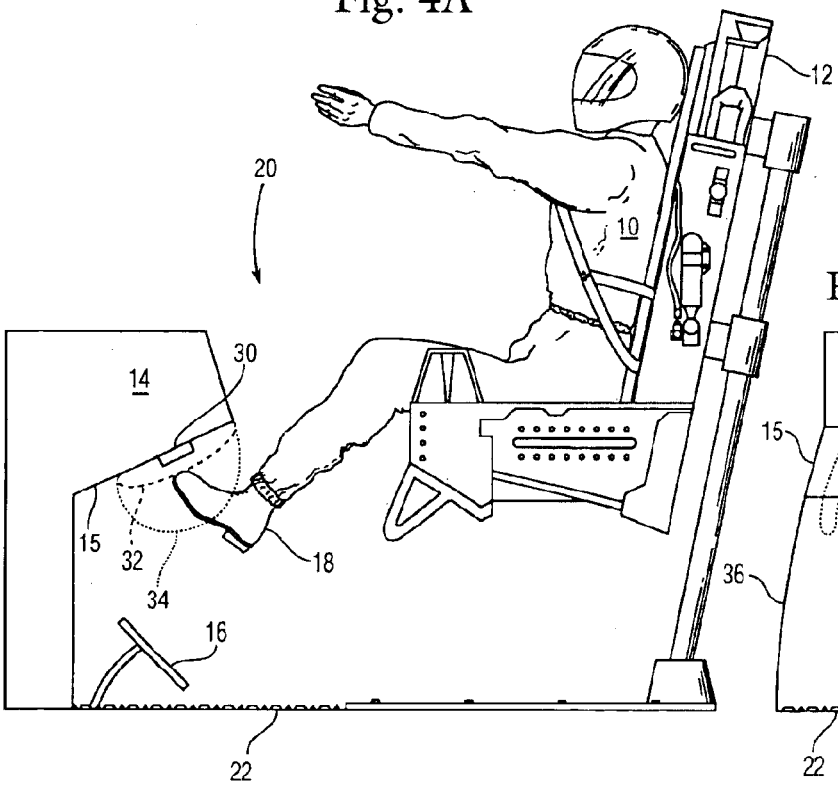

Fig. 4B

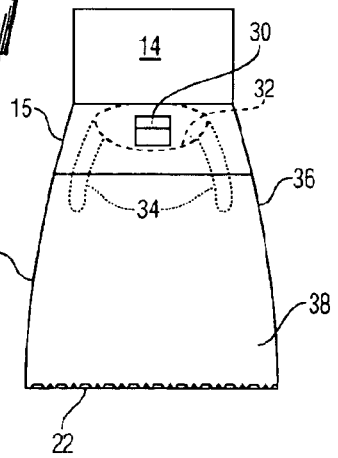

Fig. 5A

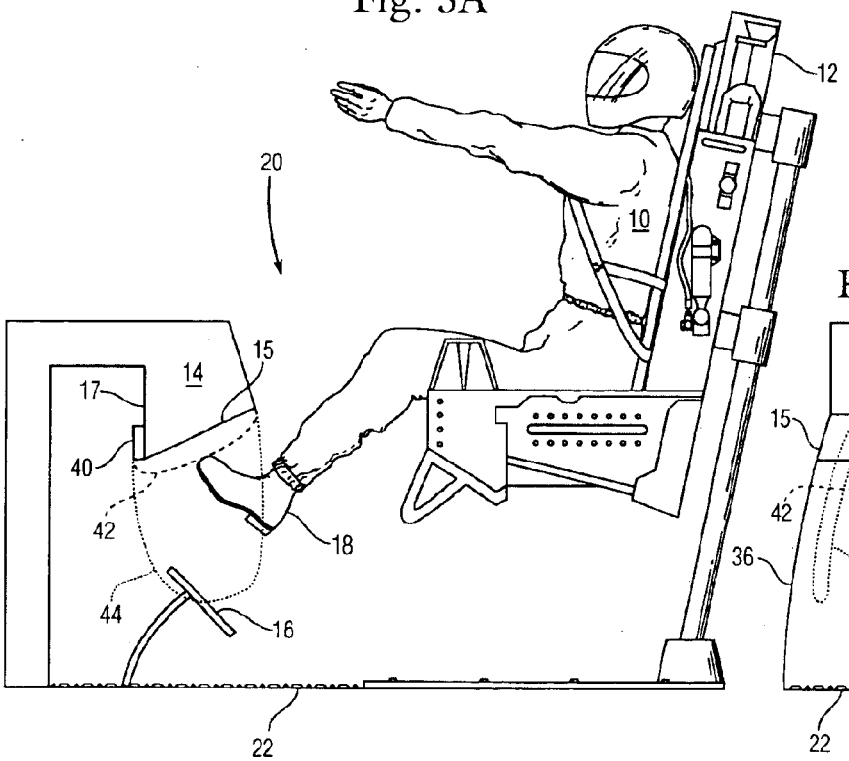

Fig. 5B

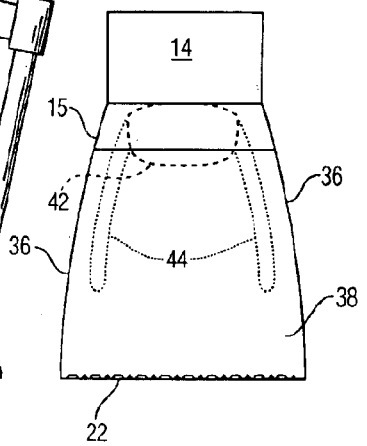

APPARATUS AND METHOD FOR MITIGATING TOE STRIKE IN AIRCRAFT

STATEMENT OF GOVERNMENT INTEREST

The invention described herein may be manufactured and used by or for the Government of the United States of America for government purposes without the payment of any royalties therefor.

BACKGROUND OF THE INVENTION

The invention relates in general to aircraft pilot ejection safety devices and in particular to a safety device for mitigating toe strike during pilot ejection from an aircraft.

Both small and large aircraft pilots place their legs within the narrow foot well (or foot wells) of an aircraft cockpit to reach the rudder pedals. The foot well is generally defined by the instrument panel and the floor of the aircraft. During the ejection process, as the legs are withdrawn upward through the foot wells, it is possible for the feet and toes to strike the top of the foot well and instrument console. This condition is commonly known as "toe strike" and can lead to serious injury.

Although the acceleration forces of ejection do help pull the legs down, the rapid rise of the seat, an occupant's leg size and the confines of the cockpit, particularly the foot well, can work against clearing the feet from the instrument console. The Air Force and Navy have developed a set of anthropometrical cases to describe the range of the aircrew population, see Table 1 below.

TABLE 1

Joint DOD Anthropometric Cases (partial listing of attributes)

Feature	Case 1 Small	Case 2 Medium Build Short Limbs	Case 3 Medium Build Long Limbs	Case 4 Tall Sitting Height Short Limbs	Case 5 Overall Large	Case 6 Longest Limbs	Case 7 Overall Small	Case 8 Largest Torso
Buttock-knee length	21.3	21.3	26.5	22.7	27.4	27.9	20.8	25.4
Knee-height sitting	18.7	19.1	23.3	20.6	24.7	24.8	18.1	23.2
Thigh circumference range	18.5–25.0	17.1–25.0	20.2–27.6	17.6–26.3	18.6–29.2	19.1–29.7	17.8–25.2	18.6–29.1
Boot Size				5–13				

In Case 6 of Table 1, the geometry of combining a long buttock-knee and tibia (knee-height sitting) results in the knee being farther forward than in any other case. The larger thigh circumference can create a large thigh tangent angle, a space between the ejection seat and the bottom of the thigh that must be made up during the ejection process. As a result, the ejection seat can be in a slightly higher position after it fully supports the thigh. Therefore, the larger tibia is confined, takes longer to clear the same area compared to other cases, thereby resulting in the foot injury.

This type of foot injury may also occur with combinations of Table 1 Features and other human factors not defined in Table 1, in combination with ejection seat height adjustment prior to ejection. Other factors relating to the construction of the aircraft, including but not limited to the cockpit and placement of the ejection seat within the cockpit, can also affect the likelihood of injury.

In such a case an airbag system in accordance with the present invention can mitigate the toe strike damage by 1) receiving its initiation signal from the initiation sequencing system; 2) initiating its gas generator; 3) deploying from its frangible container; 4) deflecting the occupant's limb, particularly the lower leg, and particularly the foot and toes, as the ejection seat (which has also been previously been initiated) rises from the cockpit; and 5) collapsing harmlessly out of the escape path for the remainder of the ejection sequence.

The invention will be better understood, and further objects, features, and advantages thereof will become more apparent from the following description of the preferred embodiments, taken in conjunction with the accompanying drawings.

BRIEF DESCRIPTION OF THE DRAWINGS

In the drawings, which are not necessarily to scale, like or corresponding parts are denoted by like or corresponding reference numerals.

FIG. **1** is a schematic side view of a normally situated pilot in an aircraft cockpit.

FIG. **2** is a schematic side view of the pilot during ejection.

FIG. **3** is a schematic side view of one embodiment of the invention.

FIG. **4**A is a schematic side view of a second embodiment of the invention.

FIG. **4**B is a schematic front view of the embodiment of FIG. **4**A.

FIG. **5**A is a schematic side view of a third embodiment of the invention.

FIG. **5**B is a schematic front view of the embodiment of FIG. **5**A.

DETAILED DESCRIPTION OF THE PREFERRED EMBODIMENTS

The invention is an airbag system, implemented in a number of embodiments, to mitigate foot and toe strike hazards arising during aircrew ejection. FIG. **1** is a side view of a normally situated pilot **10** in an aircraft cockpit **20**. Cockpit **20** includes a floor **22**, an ejection seat **12**, instrument console **14** and rudder pedals **16**. Pilot **10** has feet **18**. FIG. **2** is a side view of the pilot **10** during ejection. In FIG. **2**, the feet **18** of pilot **10** strike the console **14**, thereby causing possibly serious injury to the pilot's feet and toes.

FIG. **3** is a side view of one embodiment of the invention. In FIG. **3**, an airbag module **24** is flush mounted below the

instrument console **14** on a bottom surface **15** thereof. Dashed lines indicate the deployed state of the airbag **26**. Airbag **26** is a balloon type airbag, such as the driver and passenger side balloon airbags used in the automotive industry. The airbag module **24** is flush mounted to minimize the risk of creating a new strike hazard in the event the airbag fails to deploy. The airbag **26** deploys after receiving a signal (typically electric, but may be laser, ballistic gas, radio frequency or other forms) from the escape system sequencing system. The airbag **26** is integrated into the escape system sequencing system in a known manner, such as is disclosed in U.S. patent application Ser. No. 10/681,499 filed on Oct. 9, 2003, which is hereby incorporated by reference.

Airbag **26** helps deflect the feet **18** and legs of pilot **10** down and away from the instrument console **14**, and also cushions any impact with the console **14**. The placement of the flush mounted airbag module **24** is preferably near the front of the console **14**, because the size of the inflated airbag **26** must increase as its location moves farther from the front of the instrument console **14**.

FIG. **4**A is a schematic side view of a second embodiment of the invention. FIG. **4**B is a schematic front view of the embodiment of FIG. **4**A. In FIGS. **4**A and **4**B, an airbag module **30** is surface mounted below the instrument console **14** on a bottom surface **15** thereof. In FIG. **4**B, walls **36**, console **14** and floor **22** define a foot well **38**. Dashed lines indicate the deployed state of the airbag **32**. Airbag **32** is a balloon type airbag, such as the driver and passenger side balloon airbags used in the automotive industry. Airbag module **30** may also include one or more side curtain airbags **34**, shown in deployed state by dotted lines. As in the first embodiment, the airbags **32**, **34** deploy after receiving a signal from the escape system sequencing system.

The airbags **32**, **34** help deflect the feet **18** and legs down and away from the instrument console **14**, as well as to cushion any impact. The surface mounted airbags provide greater surface area coverage than the flush mounted airbags. The placement of the surface mounted airbag module **30** could be at any position along the length of the foot well **38**. The surface area of the inflated airbags **32**, **34** must be sufficient to mitigate any hazard created by the surface mounted airbag module **30**.

FIG. **5**A is a schematic side view of a third embodiment of the invention. FIG. **5**B is a schematic front view of the embodiment of FIG. **5**A. In FIGS. **5**A and **5**B, an airbag module **40** is mounted behind the instrument console **14**. Airbag module **40** is mounted on a rear surface **17** of the instrument console **14** and flush with a bottom surface **15** of the console **14**. In FIG. **5**B, walls **36**, console **14** and floor **22** define a foot well **38**. Dashed lines indicate the deployed state of the airbag **42**. Airbag **42** is a balloon type airbag, such as the driver and passenger side balloon airbags used in the automotive industry. Airbag module **40** may also include one or more side curtain airbags **44**, shown in deployed state by dotted lines. As in the first and second embodiments, the airbags **42**, **44** deploy after receiving a signal from the escape system sequencing system. The airbags **42**, **44** help deflect the feet **18** and legs down and away from the instrument console **14**, as well as to cushion any impact.

In the invention, different types of airbag construction technologies can be employed, such as driver steering balloon, passenger balloon and side curtain, all typically used in the automotive industry. The specific size and shape of the airbag is primarily a function of the need to conform to the foot well(s) of the aircraft and the placement of the airbag. The invention may be retrofitted to certain aircraft escape systems. Airbags require no periodic maintenance, other than service life change out.

While the invention has been described with reference to certain preferred embodiments, numerous changes, alterations and modifications to the described embodiments are possible without departing from the spirit and scope of the invention as defined in the appended claims, and equivalents thereof.

What is claimed is:

1. A method for mitigating toe strike in a cockpit of an aircraft, comprising:

providing an airbag module mounted to a bottom surface of an instrument console located in the cockpit of the aircraft;

releasing an airbag from the airbag module after an ejection sequence begins; and

using the airbag to protect a pilot's lower limbs from striking the instrument console as the pilot begins ejecting.

2. The method of claim **1**, wherein the airbag module is flush mounted on said bottom surface of the instrument console.

3. The method of claim **2**, wherein the airbag is a balloon type airbag.

4. The method of claim **1**, wherein the step of releasing an airbag includes releasing a balloon type airbag and at least one side curtain type airbag.

5. The method of claim **1**, wherein the airbag module is surface mounted on said bottom surface of the instrument console.

6. The method of claim **5**, wherein the airbag is a balloon type airbag.

7. A method for mitigating toe strike in a cockpit of an aircraft comprising:

providing an airbag module mounted to an instrument console located in the cockpit of the aircraft;

releasing an airbag from the airbag module after an ejection sequence begins; and

using the airbag to protect a pilot's lower limbs from striking the instrument console as the pilot begins ejecting,

wherein the airbag module is mounted on a rear surface of the instrument console and flush with said bottom surface of the instrument console.

8. The method of claim **7**, wherein the step of releasing an airbag includes releasing a balloon type airbag and at least one side curtain type airbag.

9. The method according to claim **1**, wherein said releasing said airbag in a first direction opposite of a second direction of said pilot after said ejection sequence begins.

10. The method according to claim **7**, wherein said releasing said airbag in a substantially downward direction opposite of an upward direction of said pilot after said ejection sequence begins.

11. A method for mitigating toe strike in a cockpit of an aircraft, comprising:

providing an airbag module mounted to an instrument console located in the cockpit of the aircraft;

releasing an airbag from the airbag module after an ejection sequence begins; and

using the airbag to protect a pilot's lower limbs from striking the instrument console as the pilot begins ejecting,

wherein said cockpit comprises a floor, said releasing said airbag in a direction of said floor.

* * * * *