US006676072B1

(12) **United States Patent**
Kim et al.

(10) **Patent No.: US 6,676,072 B1**
(45) **Date of Patent: Jan. 13, 2004**

(54) **SHORT DURATION, HIGH-TORQUE ROCKET NOZZLE**

(76) Inventors: **Steven S. Kim**, 2803 Billhimer Ct., Crofton, MD (US) 21114; **Eric Hawley**, 523 N. Imboden St. Apt. 204, Alexandria, VA (US) 22304

(*) Notice: Subject to any disclaimer, the term of this patent is extended or adjusted under 35 U.S.C. 154(b) by 0 days.

(21) Appl. No.: **10/292,948**

(22) Filed: **Nov. 13, 2002**

(51) **Int. Cl.**[7] **F42B 10/00**
(52) **U.S. Cl.** **244/3.23**; 244/3.22
(58) **Field of Search** 244/3.23, 3.21; 160/222, 224; 239/265.19, 165.37

(56) **References Cited**

U.S. PATENT DOCUMENTS

2,500,537 A	*	3/1950	Goddard	
2,611,317 A	*	9/1952	Africano	
3,260,205 A		7/1966	Dietrich	102/51
3,414,217 A	*	12/1968	Kesting	
3,790,103 A		2/1974	Peoples	244/3.23
3,952,970 A		4/1976	Orzechowski et al.	244/3.23
4,194,706 A		3/1980	Detalle	244/3.23
4,497,460 A		2/1985	Thorsted et al.	244/3.23
4,936,218 A	*	6/1990	Wosenitz	
4,995,318 A	*	2/1991	Stidston et al.	
5,020,436 A		6/1991	Coburn	102/377
5,082,202 A		1/1992	Jacobson	244/322
5,511,745 A		4/1996	Faupell et al.	244/3.22
6,548,794 B2	*	4/2003	Facciano et al.	

FOREIGN PATENT DOCUMENTS

BE	520064	*	5/1955	244/3.23

* cited by examiner

Primary Examiner—Tien Dinh
(74) *Attorney, Agent, or Firm*—Mark Homer

(57) **ABSTRACT**

A rocket spin control system for a tube launched rocket has a fixed position nozzle on the rocket and a set of internally positioned torque ring inside of the nozzle that is anchored with erodible tabs. The tabs erode as the rocket exits the launcher. With the erosion of the tabs, the torque ring is free to rotationally move, which eliminates any torque imparted onto the rocket while retaining the torque ring with the rocket. This increases the reliability of rocket precision.

18 Claims, 1 Drawing Sheet

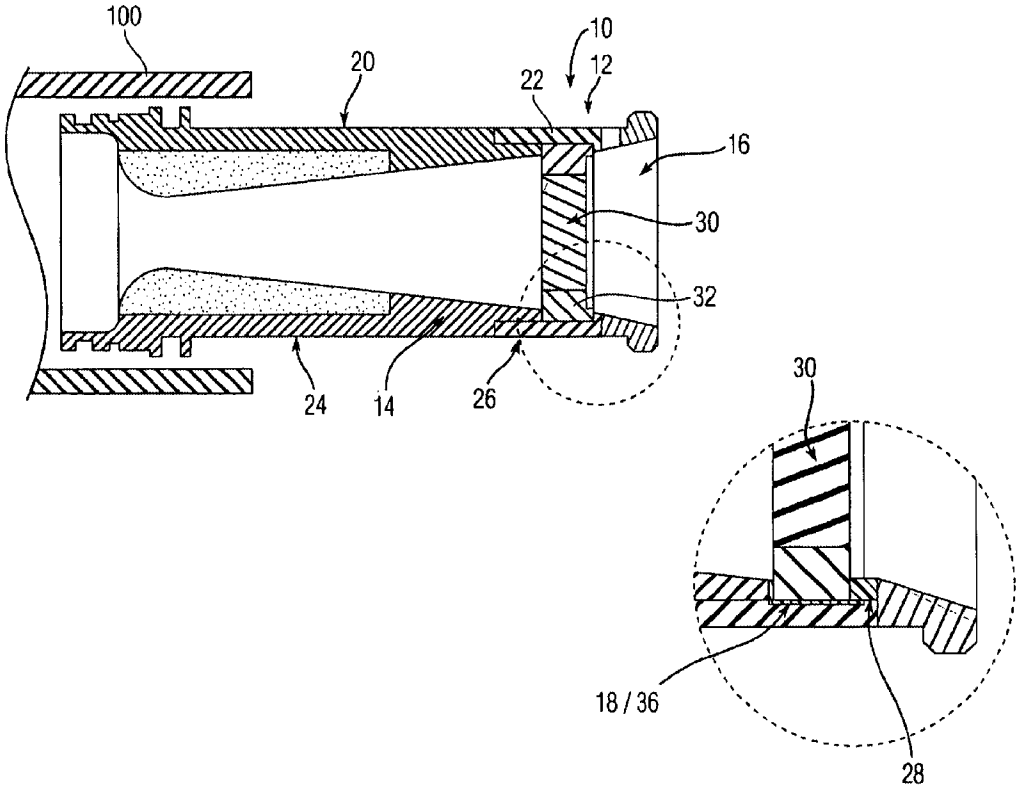

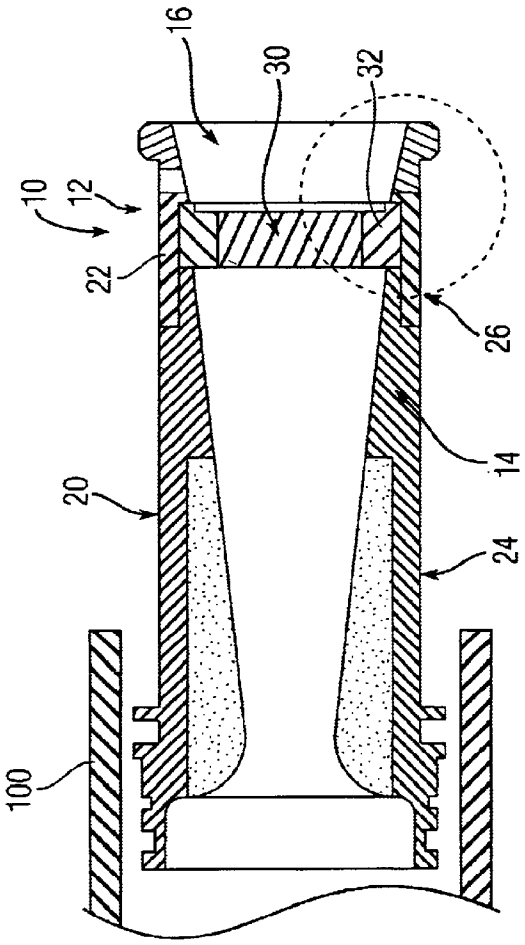

Fig. 1

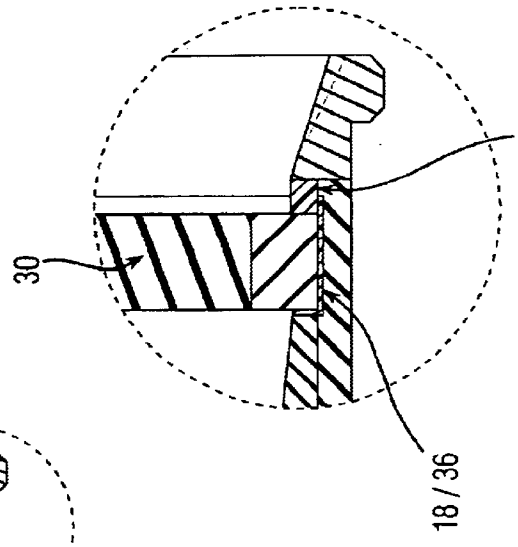

Fig. 2

SHORT DURATION, HIGH-TORQUE ROCKET NOZZLE

STATEMENT REGARDING FEDERALLY SPONSORED RESEARCH OR DEVELOPMENT

The invention described herein may be manufactured and used by or for the government of the United States of America for governmental purposes without the payment of any royalties thereon or therefor.

BACKGROUND OF THE INVENTION

1. Field of the Invention

The present invention relates to rocket torques vanes fitted within rocket nozzles. More particularly, the rocket nozzles of the present invention possess a torque ring with low erodible torque vanes that are fitted between two sections of the rocket. The torque ring is rotationally anchored with erodible retainers that erode during launch of the rocket from the rocket launcher. Most particularly, the torque ring remains attached to the rocket nozzle after the torque ring has imparted torque to the rocket, while providing an appropriate torque to the rocket during the time period of immediately prior to and just after rocket exit from the rocket launcher.

2. Brief Description of the Related Art

The 2.75-Inch rocket nozzle of the MK 66 MOD 4 Rocket Motor currently in use by the United States Navy contains flutes machined into the nozzle body of the rocket. These flutes provide a maximum torque of 3 ft.-lbs., resulting in a rocket spin rate at launcher exit of 8 Hz. Problematic with the 2.75-Inch rocket nozzle is the fact that the 3 ft.-lbs. of torque does not shut-off during the motor burn. A fin assembly on the 2.75-Inch Rocket provides an anti-spin component to the rocket to prevent the rocket motor from suffering a catastrophic reaction as it spins into its bending mode frequency. An alternative method using erodible vane configuration suffers from a tendency of the vanes eroding at the aft edge of any slot holding mechanism.

There is a need to provide increased torque to rockets, particularly the 2.75-Inch rocket, while allowing the elimination of the torque during rocket launch. The present invention addresses this and other needs.

SUMMARY OF THE INVENTION

The present invention includes a rocket spin control system for a tube launched rocket comprising a torque vane system having a plurality of substantially low erodible vanes, the torque vane system attachable to the rocket, wherein the plurality of low erodible vanes are positionally fixed aft of the rocket propelling thrust effective to impart rapid spin to the rocket and one or more erodible retainers attachable to the torque vane system, wherein the erodible retainer retains the torque vane system in a manner that secures the substantially low erodible vanes in a fixed angular orientation within the rocket propelling thrust effective to provide torque to the rocket until the one or more erodible retainers erode wherein the torque vane system remains attached to the rocket and ceases to provide torque to the rocket.

The present invention also includes a method for imparting a spin on a rocket comprising the steps of providing a rocket spin control system for a tube launched rocket comprising a torque vane system having a plurality of substantially low erodible vanes, the torque vane system attachable to the rocket, wherein the plurality of low erodible vanes are positionally fixed aft of the rocket propelling thrust effective to impart rapid spin to the rocket and one or more erodible retainers attachable to the torque vane system, wherein the one or more erodible retainers retain the torque vane system in a manner that secures the low erodible vanes in a fixed angular orientation within the rocket propelling thrust effective to provide torque to the rocket until the one or more erodible retainers erode wherein the torque vane system remains attached to the rocket and ceases to provide torque to the rocket and launching the rocket from the launch tube, wherein the one or more erodible retainers erode.

The present invention further includes a rapid spin rocket product produced by the method comprising the steps of providing a rocket spin control system for a tube launched rocket comprising a torque vane system having a plurality of substantially low erodible vanes, the torque vane system attachable to the rocket, wherein the plurality of low erodible vanes are positionally fixed aft of the rocket propelling thrust effective to impart rapid spin to the rocket and one or more erodible retainers attachable to the torque vane system, wherein the one or more erodible retainers retain the torque vane system in a manner that secures the substantially low erodible vanes in a fixed angular orientation within the rocket propelling thrust effective to provide torque to the rocket until the one or more erodible retainers erode wherein the torque vane system remains attached to the rocket and ceases to provide torque to the rocket and launching the rocket from the launch tube, wherein the one or more erodible retainers erode.

The present invention provides greater torque for greater rocket spin rate to improve rocket impact precision. The invention also incorporate a mechanism to prevent a rocket spin at its bending mode frequency. Increasing the rocket spin rate at rocket launch improves rocket precision by averaging out the rocket thrust misalignment that causes imprecision.

The present invention is particularly useful on a tube launched rocket, such as a 2.75 inch rocket.

BRIEF DESCRIPTION OF THE DRAWINGS

FIG. **1** shows a side cut away view of a rocket nozzle section of the present invention having two threaded sections with a torque ring rotationally held in place with erodible retainers; and,

FIG. **2** is a cross-sectional rear view of the present invention, shown in FIG. **1**, showing the torque ring abutting a Teflon® insert held with a erodible retainer.

DETAILED DESCRIPTION OF THE PREFERRED EMBODIMENT

The present invention provides a high torque nozzle for a rocket system having low erodible vanes, particularly the 2.75-Inch rocket. The low erodible high torque vanes are internally positioned inside of the rocket nozzle to impart torque to the rocket during rocket launch from a rocket launcher. The present invention includes a system of low erodible vanes fixed in position with an erodible retainer, with the low erodible torque vane system preferably comprising a torque ring having a plurality of the low erodible vanes. The erodible retainer erodes after a set time which allows the low erodible torque vanes to freely spin relative to the nozzle thrust. With this free movement, no additional torque is imparted onto the rocket. This improves the precision of the rocket by removing the effect of the vanes, i.e., removing the torque imparted to the rocket after the

rocket has left the rocket launcher. Additionally, imprecision occurs from thrust misalignment that is due to the tolerance stack-ups at the nozzle and motor joint. The nozzle of the present invention increases the rocket spin rate at launcher exit from 8 to 40 Hz. By increasing the rocket spin rate, the thrust misalignment averages out, minimizing its precision error contribution. This high rocket motor spin rate at launch is significant for improving the rocket precision.

As seen in FIGS. **1** and **2**, the rocket spin control system **10** for a tube launched rocket **12** of the present invention includes a rocket **12** having a fixed position nozzle **20**. Inside of the fixed position nozzle **20**, and aft of the propelling thrust of the rocket **12**, are a set of internally positioned substantially low erodible high torque vanes **30**, constituting part of a torque vane system **26**, that are fixed within the nozzle **20** by one or more erodible retainers **28**. During launch, the high torque vanes **30** impart rapid spin to the rocket **12** from rocket ignition to exit of the rocket **12** from a launch tube **100**. Prior to, concurrent with, or just after the rocket **12** exiting the launch tube **100**, the erodible retainers **28** are eroded which frees the torque vane system **26** to freely move relative to the rocket **12**. As such the torque vane system **26** remains within the propelling thrust of the rocket **12** but does not impart any torque onto the rocket **12** once freed. The rocket spin control system **10** may further include a spin neutral fin assembly that is located on the outside of the nozzle **20** for rocket **12** guidance.

By remaining attached to the rocket **12**, the torque vane system **26** does not create a hazard during launch of the rocket **12** from the launch tube **100**. Additionally, the torque vane system **26** does not depend on being ejected from the rocket **12**, which reduces the failure rate of a torque imparting system.

Referring to FIGS. **1** and **2**, the rocket spin control system **10** has two sections, a first section of a rocket nozzle body **14** and a second section **16** of a rocket nozzle body **24**. These two body sections **14** and **16** interconnect to hold the torque vanes system **26** in place along the length of the rocket **12**. The torque vane system **26** includes a plurality of low erodible torque vanes **30** that are attached to a low erodible ring mechanism in the form of a torque ring **32**, which is fitted between the first **14** and second **16** sections of the rocket nozzle body **24** within a groove **18** formed by the connecting first **14** and second **16** sections of the rocket nozzle body **24**.

When the first **14** and second **16** sections of the rocket nozzle body **24** are connected, the two sections **14** and **16** form a groove **18** suitable for inserting and retaining the torque ring **32** within the fixed position rocket nozzle **20**. The groove **18** includes an open area between the first **14** and second **16** rocket body sections that allows the torque ring **32** to fit in the groove **18**, while allowing the torque ring **32** to rotationally move therein. The two sections **14** and **16** are connected by any suitable mechanism for holding **22** the two sections **14** and **16** together, such as latching, hooking, screwing, adhering and the like, with the appropriate holding mechanism being determinable by one of ordinary skill in the art in light of the disclosure herein. Preferably, the high torque nozzle system **10** is preferably configured for the first **14** and second **16** sections of the rocket nozzle **20** connect by a threaded mating connection that permits the two sections **14** and **16** to be screwed together. Most preferably the threaded mating connection is right-handed, and as such the imparted spin of the launching rocket **12** further rotationally forces the first **14** and second **16** rocket body sections together at the threaded connection where two sections **14** and **16** are mated together. Alternatively, the two sections **14** and **16** may be formed as a single piece.

As seen in FIG. **2**, the groove **18** may include a frictionally reduced surface **36** along the area where the torque ring **32** abuts the rocket nozzle **20**. FIG. **2** shows the torque ring **32** abutting frictionally reduced surface **36** made of a Teflon® insert while being held in place with the erodible retainers **28**. The groove **18** preferably contains this frictionally reduced surface **36** along the surface to which the torque ring **32** connects to the rocket **12**. This frictionally reduced surface **36** aids the free movement of the torque ring **32** once freed from the restraint of the erodible retainer(s) **28**. The frictionally reduced surface **36** may include any appropriate surface suitable for the high temperature and turbulent environment of the rocket thrust, such as a Teflon® coating or insert and other like surface materials, or the use of high temperature lubricants and the like. The use of coatings, inserts and/or lubricants may additionally prevent galvanic corrosion with the use of metallic torque rings **32**.

The torque ring **32** preferably has one or more slots **36** therein. These slots **36** provide attachment to and restraint by the erodible release tabs **28**.

The rocket spin control system **10** further includes one or more erodible retainers **28** which are attached to the rocket nozzle body **24** and the inserted torque ring **32**. The erodible retainers **28** rotationally fix the torque ring **32** retained within the groove **18** of the rocket nozzle body **24**. The erodible retainers **28** are composed of any suitable composition for erosion from rocket thrust heat and high imparted rocket torque within the appropriate time period during launch of the rocket **12**. The selection of the composition is determinable by those skilled in the art for a material that effectively erodes during the expected 0.07 seconds of operation of the low erodible torque vanes **30**. The composition may include, for example, plastic, thermoplastic, silica-phenolic, glass-phenolic, refractory metal, carbon-carbon, carbon-phenolic, graphite-phenolic and ceramic. Preferably the one or more erodible retainers **28** comprise a thermoplastic composition or phenolic composition. Suitable compositions include, for example, 20 percent by weight of glass in combination with 80 percent by weight of thermoplastic, such as that sold under the tradename Lexan by General Electric, or other like compositions such as nylon 6/6 manufactured by Amco Plastic Materials. The configuration of the erodible retainers **28** may include any appropriate design or shape for its given retention purpose, as determinable by one skilled in the art in light of the disclosure herein. Preferred configurations include, for example, tab, strip, patch and other suitable configuration for anchoring the torque ring **32**. Most preferably, the erodible retainers **28** are configured in a tab configuration. Suitable thicknesses, widths, depths and masses of the erodible retainer(s) **28** may be determinable by ordinary experimentation with, for example, thicknesses of from about 1 millimeter to about 5 millimeters, widths of from about 2 millimeters to about 6 millimeters, depths of from about 2 millimeters to about 4 millimeters, and masses of from about 0.04 grams to about 0.14 grams being particularly applicable for rotationally anchoring the torque ring **32** with the groove **18**.

The erodible retainer(s) **28** retain the torque vane system **26** in a manner that secures the low erodible torque vanes in a fixed angular orientation within the rocket propelling thrust. The low erodible torque vanes **30** stop imparting torque onto the rocket, i.e., the torque vane system **26** freely moves relative to the rocket thrust, once the one or more erodible retainer(s) **28** have eroded from the propelling thrust of the rocket **12**. During launch, the low erodible vanes **30** are not needed to slow the rocket **12** spin because

the torque shut-offs at launcher tube **100** exit with the erosion of the erodible retain(s) **28** and the free movement of the torque vane system **26** sufficient to remove the influence of the low erodible torque vanes **30**. With the torque ring **32** placed within the groove **18**, the low erodible torque vanes **30** extend through the nozzle **20** body into the thrust of the rocket **12**. The placement of the torque ring **32** into the groove **18** prevents the torque ring **32** from being ejected from the rocket nozzle **20**. Any appropriate number of low erodible torque vanes **30** may be used, preferably from about 12 or less, and more preferably from about 8 to about 10 low erodible torque vanes **30** are used. The low erodible vanes **30** are attached to and incorporated into the torque ring **32** in any appropriate arrangement, preferably in equal distances along the surface of the torque ring **32**. The individually torque vanes **30** are attached to the torque ring **32** in a manner that allows the torque ring **32** to be placed within the formed groove **18** between the first **14** and second **16** rocket body sections while allowing both rotational movement thereto and the torque vanes **30** to be within the rocket thrust during launch to provide torque. Suitable compositions of the low erodible torque vanes **30** may be determined by one skilled in the art, with preferred compositions including, for example, metallic and phenolic materials. Preferably, each of the low erodible vanes **30** are identical to the other low erodible vanes **30** on the torque ring **32**. The torque ring **32** of the rocket spin control system **10** may include a ring structure **34** connected to the plurality of low erodible vanes **30** separately connected, as a single molded piece, or in combinations thereof. In the form of a single molded piece, the torque ring **32** is preferably formed from the same composition as the torque vanes **30**.

For the 2.75 inch rocket, the dimensions of the low erodible torque vanes **30** are preferably from about 0.5 inches to about 0.7 inches in length, from about 0.06 to about 0.12 inches in width, and from about 0.2 to about 0.3 inches in depth (D). Preferably, the erodible vane **30** extend from about 0.2 inches to about 0.3 inches into the rocket nozzle **20**. The circumference of the torque ring **32** preferably ranges from about 1.9 inches to about 2.1 inches.

Once within the groove **18**, the torque ring **32** is rotationally anchored with the one or more erodible retainers **28**. The erodible retainers **28** are located within the thrust of the rocket **12** to allow complete failure, i.e., removal of the erodible retainers **28** as rotational anchors to the torque ring **32**, which allows the torque ring **32** to spin within the groove **18** while the low erodible torque vanes **30** are exposed to the thrust of the rocket **12**. With the free rotational movement, i.e., spinning or circular rotation, of the torque ring **32**, the torque ring system **26** ceases to impart torque onto the rocket **12** even as the rocket thrust continues to impact the low erodible torque vanes **30**.

The rocket spin control system **10** imparts a spin on the rocket **12** during rocket launch. By fixing the torque ring **32** between the first section **14** and second section **16** of the rocket nozzle **20** of the high torque nozzle system **10**, the torque ring **32** retains a higher reliability for remaining fixed in place during launch. The formed groove **18** houses the torque ring **32** in a manner that prohibits inappropriate torque ring **32** ejection from the launching rocket **20**, which may occur in systems that do not have such a securing mechanism.

In operation, the secured torque ring **32**, with the plurality of low erodible torque vanes **30**, between the first **14** and second **16** sections of the rocket nozzle body **24**, remains longitudinally fixed from retention by the groove **18** and rotationally fixed from one or more erodible retainer(s) **28** within the nozzle **20** as the rocket **12** is launched from the rocket launcher **100**. As the rocket **12** exits the launcher **100**, the erodible retainer(s) **28**, being exposed to the thrust of the rocket **12**, erode. This erosion of the erodible retainer(s) **28** during rocket **12** exit occurs immediately prior to, concurrently with, or just after rocket launch from the launcher **100**. As such, the rocket **12** may still be contained within the launcher **100** or within about 10 feet from the launcher **100** for the erodible retainer(s) **28** to have eroded. The erodible retainer(s) **28** erode in a manner to impart proper torque onto the launching rocket **12**. For a 2.75 inch rocket, and other similar weapons, the erodible retainer(s) **28** erode in from about 0.05 seconds to about 0.10 seconds after rocket launch (i.e., rocket ignition), such as for example 0.07 seconds. The torque ring **32** imparts from about 10 ft-lb or greater pounds of torque to the launched rocket, preferably from about 10 ft-lb to about 15 ft-lb of torque to the launched rocket **12** for an approximate time of 0.07 seconds, which equates to expected rocket **12** exit from the launcher **100**. The low erodible torque vanes **30**, in combination with the nozzle **20**, preferably spin the rocket to 40 Hz, which minimizes the effects of thrust misalignment. As the rocket **12** exits the launch tube **14**, the rocket **12** possesses low forward velocity and minimal gyroscopic stability. Perturbation, such as thrust misalignments and side winds, have a significant influence on the rocket's flight direction. As the erodible retainer(s) **28** erode, and "shut-off" the torque at launcher **100** exit, the rocket spin rate does not exceed its first bending mode frequency, such as from about 50 to about 60 Hz, which would have a catastrophic effect on the rocket **12**.

Launch of the rocket **12** having the high torque nozzle system **10** of the present invention results in a rapid spin rocket. The rapid spin produced onto rocket **12** eliminates launch imprecision that occurs from thrust misalignment of the rocket nozzle **20** and motor joint. The rapid spin minimizes the precision error contribution by averaging out the thrust misalignment. The present invention achieves higher torque capability and better torque vane attachment than previously known. The launched rapid spin rocket generally has a greatly improved Circular Error Probable, preferably ranging from about 5 milliradians or less.

The rocket spin control system **10** is particularly useful on rocket **12**, such as a military surface or air-launched weapon. Most preferably the rocket spin control system **10** is useful on the 2.75 inch rocket currently used by the United States Navy and Marine Corps.

EXAMPLE 1

A precision analysis from a ground launch perspective was completed that predicted that the 2.75-Inch Rocket with a torque ring anchored by erodible retainer(s) attached between to nozzle body sections improved the rocket precision error from about 19-milliradians to about 5-milliradians.

EXAMPLE 2 (prophetic)

The precision of the 2.75-Inch Rocket is improved with the incorporation of a torque ring secured in a groove with erodible tabs between two nozzle body sections erodible having eight low erodible vanes equally spaced along the circumference of the torque ring. A lubricant is applied to the groove prior to placement of the torque ring therein. The torque ring is overlaid with erodible tabs sufficiently to rotationally anchor the torque ring. During launch the of the 2.75-Inch Rocket spin at launcher exit increases to about 40 hertz. At approximately 0.7 seconds from firing of the

rocket, nozzle torque is shut-off at launcher exit. This occurs with the erodible tabs eroding and freeing the torque ring to rotate along the inner surface of the groove while the rocket is in motion.

The 2.75-Inch Rocket Motor with the torque ring fixed with erodible tabs is fired at a target with no effect on ballistic performance. The increased spin rate averages out thrust misalignment. The retractable vanes increase the rocket accuracy by approximately 360%.

EXAMPLE 3 (prophetic)

The precision of the 2.75-Inch Rocket is improved with the incorporation of a torque ring secured in a groove between two nozzle body sections erodible having ten low erodible vanes equally spaced along the circumference of the torque ring. The torque ring is anchored with erodible strips applied to the inner surface of the nozzle after the placement of the torque ring therein. During launch the of the 2.75-Inch Rocket spin at launcher exit increases to about 40 hertz. At approximately 0.7 seconds from firing of the rocket, nozzle torque is shut-off at launcher exit. This occurs with the erosion of the erodible strips which frees the torque ring to rotationally turn within the groove.

The 2.75-Inch Rocket Motor with the torque ring anchored by erodible strips is fired at a target with no effect on ballistic performance. The increased spin rate averages out thrust misalignment. The retractable vanes increase the rocket accuracy by approximately 360%.

EXAMPLE 4 (comparative)

The rocket spin rate of the 2.75-Inch Rocket was increased to over 20 Hz with a molded plastic ring with erodible torque vanes. The molded plastic ring was glued into the end of the nozzle body. The plastic ring ejected from the 2.75-Inch Rocket about 50 percent of the time, causing hazardous debris.

The foregoing summary, description, examples and drawings of the invention are not intended to be limiting, but are only exemplary of the inventive features which are defined in the claims.

What is claimed is:

1. A rocket spin control system for a tube launched rocket, comprising:

a torque vane system having a plurality of substantially low erodible vanes, the torque vane system attachable to the rocket, wherein the plurality of low erodible vanes are positionally fixed aft of the rocket propelling thrust effective to impart rapid spin to the rocket; and,

one or more erodible retainers attachable to the torque vane system, wherein the erodible retainer retains the torque vane system in a manner that secures the substantially low erodible vanes in a fixed angular orientation within the rocket propelling thrust effective to provide torque to the rocket until the one or more erodible retainers erode wherein the torque vane system remains attached to the rocket and ceases to provide torque to the rocket.

2. The rocket spin control system of claim **1**, wherein the torque vane system freely moves relative to the rocket thrust once the one or more erodible retainers erode.

3. The rocket spin control system of claim **2**, wherein the torque vane system comprises a low erodible ring mechanism.

4. The rocket spin control system of claim **3**, wherein the low erodible ring mechanism comprises one or more slots therein.

5. The rocket spin control system of claim **3**, wherein the low erodible ring mechanism freely moves in a circular rotation.

6. The rocket spin control system of claim **1**, wherein the torque vane system attaches to the rocket along a frictionally reduced surface.

7. The rocket spin control system of claim **1**, wherein the torque vane system attaches to the rocket between two rocket body halves forming a groove therebetween.

8. The rocket spin control system of claim **1**, wherein the plurality of low erodible vanes are internally positioned inside of the nozzle of the rocket.

9. The rocket spin control system of claim **8**, wherein the nozzle of the rocket comprises a fixed position nozzle.

10. The rocket spin control system of claim **1**, wherein the plurality of substantially low erodible vanes comprises a composition selected from the group consisting of metallic and phenolic materials.

11. The rocket spin control system of claim **1**, wherein the one or more erodible retainers comprise a tab configuration.

12. The rocket spin control system of claim **1**, wherein the one or more erodible retainers comprise a composition selected from the group consisting of plastic, thermoplastic, silica-phenolic, glass-phenolic, refractory metal, carbon-carbon, carbon-phenolic, graphite-phenolic and ceramic.

13. The rocket of claim **1**, wherein the rocket comprises a 2.75 inch rocket.

14. A method for imparting a spin on a rocket, comprising the steps of:

providing a rocket spin control system for a tube launched rocket comprising a torque vane system having a plurality of substantially low erodible vanes, the torque vane system attachable to the rocket, wherein the plurality of low erodible vanes are positionally fixed aft of the rocket propelling thrust effective to impart rapid spin to the rocket and one or more erodible retainers attachable to the torque vane system, wherein the one or more erodible retainers retain the torque vane system in a manner that secures the low erodible vanes in a fixed angular orientation within the rocket propelling thrust effective to provide torque to the rocket until the one or more erodible retainers erode wherein the torque vane system remains attached to the rocket and ceases to provide torque to the rocket; and,

launching the rocket from the launch tube, wherein the one or more erodible retainers erode.

15. The method of claim **14**, wherein the one or more erodible retainers erode prior to the rocket exiting the tube.

16. The rocket spin control system of claim **14**, wherein the torque vane system imparts a rocket spin of from about 40 hertz to about 50 hertz onto the rocket.

17. The rocket spin control system of claim **14**, wherein the torque vane system generates a torque of from about 10 foot-pounds or more.

18. A rapid spin rocket product produced by the method comprising the steps of:

providing a rocket spin control system for a tube launched rocket comprising a torque vane system having a plurality of substantially low erodible vanes, the torque vane system attachable to the rocket, wherein the plurality of low erodible vanes are positionally fixed aft of the rocket propelling thrust effective to impart rapid spin to the rocket and one or more erodible retainers attachable to the torque vane system, wherein the one or more erodible retainers retain the torque vane system in a manner that secures the substantially low erodible vanes in a fixed angular orientation within the rocket

propelling thrust effective to provide torque to the rocket until the one or more erodible retainers erode wherein the torque vane system remains attached to the rocket and ceases to provide torque to the rocket; and,

launching the rocket from the launch tube, wherein the one or more erodible retainers erode.

* * * * *