US006450443B1

(12) **United States Patent**
Kim

(10) **Patent No.: US 6,450,443 B1**
(45) **Date of Patent: Sep. 17, 2002**

(54) **HIGH TORQUE 2.75-INCH ROCKET NOZZLE**

(75) Inventor: **Steven S. Kim**, Crofton, MD (US)

(73) Assignee: **The United States of America as represented by the Secretary of the Navy**, Washington, DC (US)

(*) Notice: Subject to any disclaimer, the term of this patent is extended or adjusted under 35 U.S.C. 154(b) by 0 days.

(21) Appl. No.: **09/639,789**

(22) Filed: **Aug. 17, 2000**

(51) **Int. Cl.**[7] **F42B 10/26**; F42B 10/00

(52) **U.S. Cl.** **244/3.23**; 244/3.1; 239/265.15

(58) **Field of Search** 244/3.1, 3.23, 244/3.24–3.3, 3.22; 239/265.15, 265.11–265.14, 265.16–265.43

(56) **References Cited**

U.S. PATENT DOCUMENTS

3,260,205 A		7/1966	Dietrich	
3,430,900 A		3/1969	Turner et al.	244/3.23
3,635,404 A	*	1/1972	Hopkins et al.	239/265.15
4,203,569 A		5/1980	Marks	244/3.23
4,497,460 A		2/1985	Thorsted et al.	244/3.3
4,562,980 A	*	1/1986	Deans et al.	244/3.22
5,078,336 A	*	1/1992	Carter	244/3.22
5,511,745 A		4/1996	Faupell et al.	244/3.22
5,806,791 A		9/1998	Hatalsky et al.	244/3.24

FOREIGN PATENT DOCUMENTS

GB	2060078 A	*	4/1981	F02K/9/97

* cited by examiner

Primary Examiner—Bernarr E. Gregory
(74) *Attorney, Agent, or Firm*—Mark Homer

(57) **ABSTRACT**

A rocket spin control system for a tube launched rocket has a fixed position nozzle on the rocket and a set of internally positioned erodible or retractable vanes inside of the nozzle. The vanes are removed from the rocket propelling thrust at rocket exit from the tube.

19 Claims, 2 Drawing Sheets

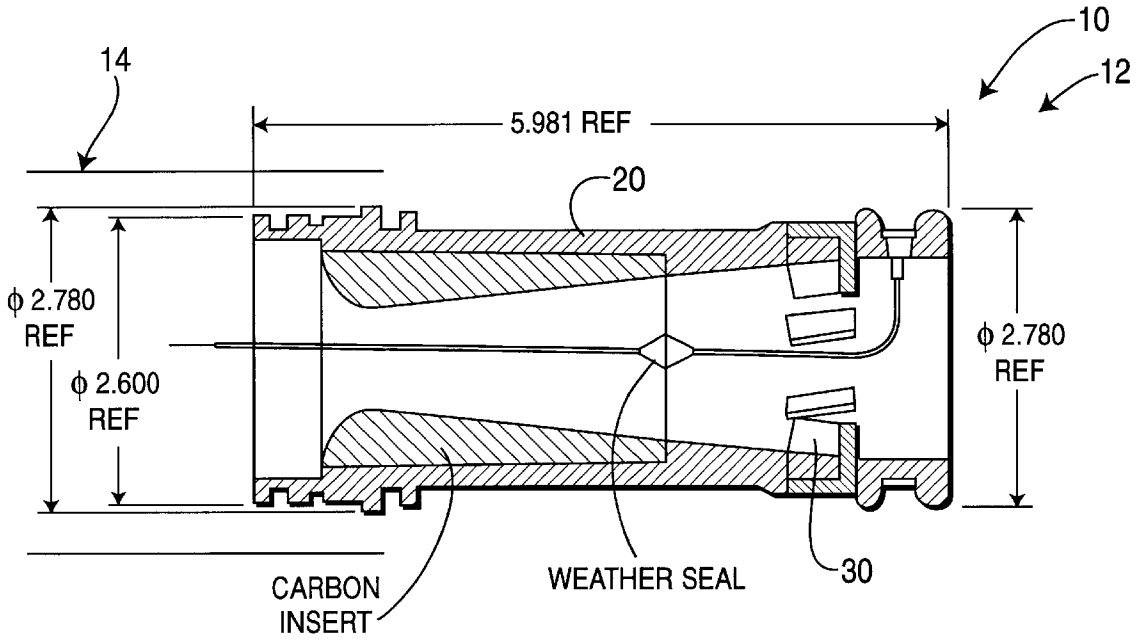

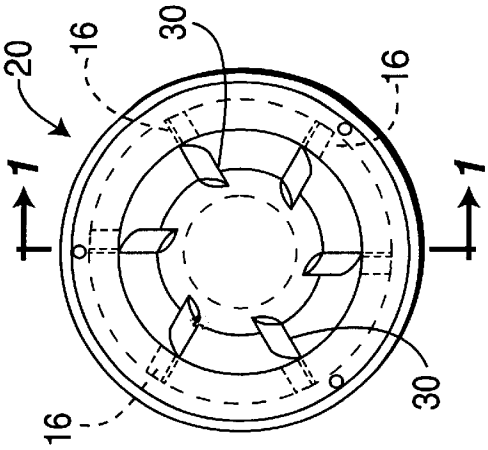
20
16
30
16
1
1
16
30

FIG. 1A

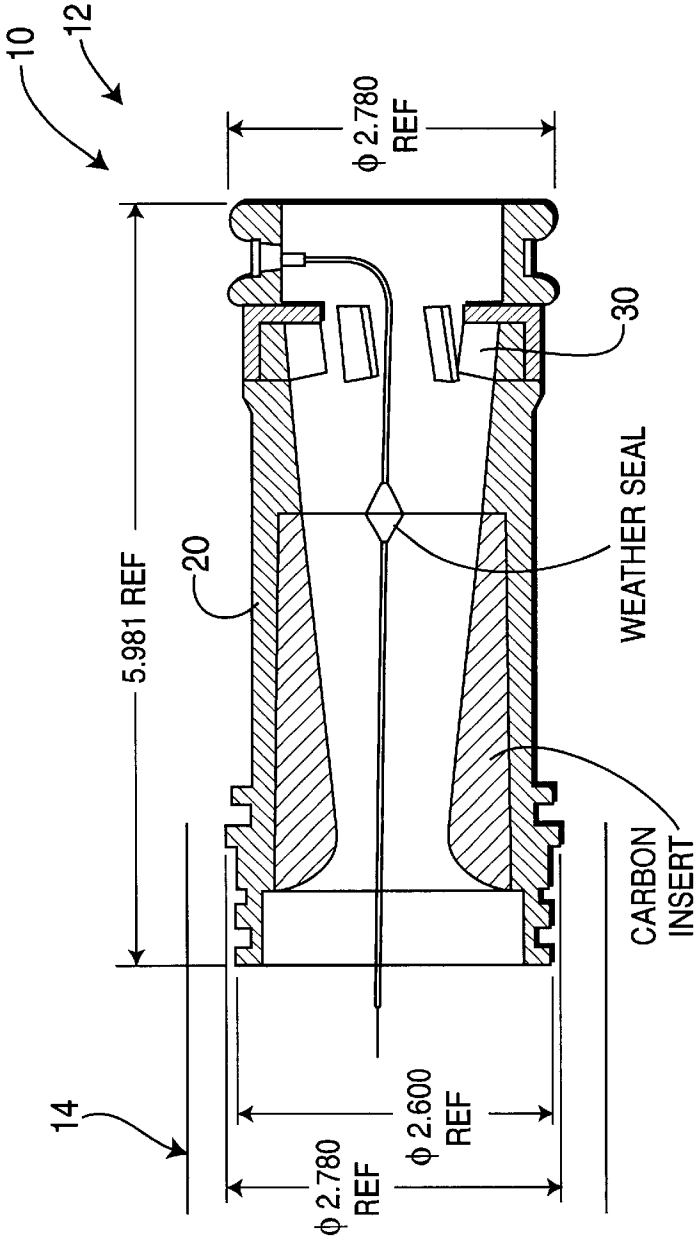
10
12
ϕ 2.780
REF
5.981 REF
20
30
WEATHER SEAL
CARBON
INSERT
14
ϕ 2.600
REF
ϕ 2.780
REF

FIG. 1

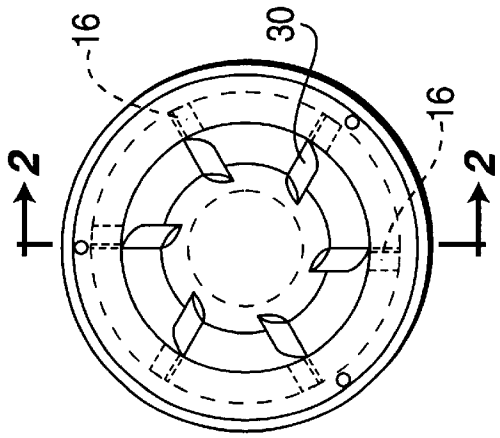
16
30
16
2
2

FIG. 2A

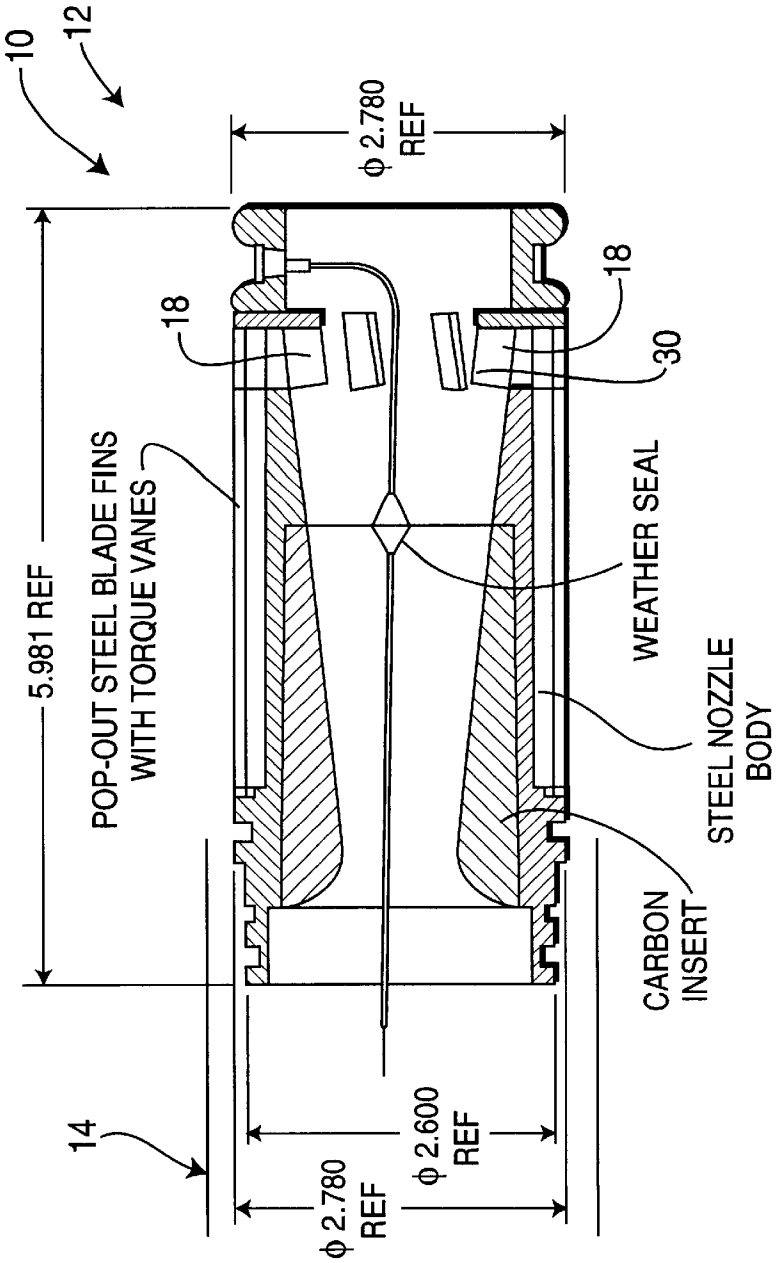
10
12
ϕ 2.780
REF
18
18
30
5.981 REF
POP-OUT STEEL BLADE FINS
WITH TORQUE VANES
WEATHER SEAL
STEEL NOZZLE
BODY
CARBON
INSERT
14
ϕ 2.600
REF
ϕ 2.780
REF

FIG. 2

HIGH TORQUE 2.75-INCH ROCKET NOZZLE

STATEMENT REGARDING FEDERALLY SPONSORED RESEARCH OR DEVELOPMENT

The invention described herein may be manufactured and used by or for the government of the United States of America for governmental purposes without the payment of any royalties thereon or therefor.

BACKGROUND OF THE INVENTION

1. Field of the Invention

The present invention relates to rocket nozzles. More particularly, the rocket nozzles of the present invention possess torque vanes that are removable immediately after launch of the rocket. Most particularly, the torque vanes may be either erodible or retractable from the rocket motor exhaust after imparting sufficient rocket spin onto the rocket.

2. Brief Description of the Related Art

The 2.75-Inch rocket nozzle of the MK 66 MOD 4 Rocket Motor currently in use by the United States Navy contains flutes machined into the nozzle body of the rocket. These flutes provide a maximum torque of 3 ft.-lbs., resulting in a rocket spin rate at launcher exit of 8 Hz. Problematic with the 2.75-Inch rocket nozzle is the fact that the 3 ft.-lbs. of torque does not shut-off during the motor burn. A fin assembly on the 2.75-Inch Rocket provides an anti-spin component to the rocket to prevent the rocket motor from suffering a catastrophic reaction as it spins into its bending mode frequency.

There is a need to provide increased torque to the 2.75-Inch rocket while allowing the shutting off the torque immediately after missile launch in order to improve the precision of the rocket. The present invention addresses this and other needs.

SUMMARY OF THE INVENTION

The present invention includes a rocket spin control system for a tube launched rocket comprising a fixed position nozzle on the rocket and a set of internally positioned vanes inside of the fixed position nozzle, located aft of rocket propelling thrust, that impart rapid spin to the rocket from rocket ignition to exit of the rocket from the tube, wherein the vanes are removed from the rocket propelling thrust at rocket exit from the tube.

The present invention also includes a method for imparting a spin on a rocket comprising the steps of providing a rocket spin control system for a tube launched rocket comprising a fixed position nozzle on the rocket and a set of internally positioned vanes inside of the fixed position nozzle, located aft of rocket propelling thrust, that impart rapid spin to the rocket from rocket ignition to exit of the rocket from the tube and launching the rocket from the tube, wherein the vanes are removed from the rocket propelling thrust at rocket exit from the tube.

The present invention further includes a rapid spin rocket product produced by the method comprising the steps of providing a rocket spin control system for a tube launched rocket comprising a fixed position nozzle on the rocket and a set of internally positioned vanes inside of the fixed position nozzle, located aft of rocket propelling thrust, that impart rapid spin to the rocket from rocket ignition to exit of the rocket from the tube and launching the rocket from the tube, wherein the vanes are removed from the rocket propelling thrust at rocket exit from the tube.

The present invention improves the precision of the 2.75-Inch Rocket.

BRIEF DESCRIPTION OF THE DRAWINGS

FIG. **1** is a side cross-sectional view of a rocket motor having retractable torque vanes of the present invention with FIG. **1**A showing a rear view of FIG. **1**; and,

FIG. **2** is a side cross-sectional view of a rocket motor having erodible torque vanes of the present invention with FIG. **2**A showing a rear view of FIG. **2**.

DETAILED DESCRIPTION OF THE PREFERRED EMBODIMENT

The present invention provides a high torque nozzle for the 2.75-Inch rocket system having removable vanes that are either erodible or retractable. The removable high torque vanes are internally positioned inside of the nozzle. The erodible or retractable vanes of the present invention improve the precision of the 2.75-Inch rocket system by eliminating the vanes from influencing the thrust once the rocket has left the launcher. Additionally, imprecision occurs from thrust misalignment that is due to the tolerance stack-ups at the nozzle and motor joint. The nozzle of the present invention increases the rocket spin rate at launcher exit from 8 to 40 Hz. By increasing the rocket spin rate, the thrust misalignment averages out, minimizing its precision error contribution. This high rocket motor spin rate at launch is critical in improving the rocket precision.

As seen in FIGS. **1** and **2**, a rocket spin control system **10** for a tube launched rocket **12** of the present invention comprises a fixed position nozzle **20** on the rocket **12**. Inside of the fixed position nozzle **20**, and aft of the propelling thrust of the rocket **12**, are a set of internally positioned removable high torque vanes **30**. The removable vanes **30** comprise either erodible vanes or retractable vanes. During launch, the high torque vanes **30** impart rapid spin to the rocket **12** from rocket ignition to exit of the rocket **12** from the launch tube **14**. Prior to, or concurrent with, the rocket **12** exiting the launch tube **14**, the vanes **30** are removed from being influenced by the propelling thrust of the rocket **12**.

Referring to FIGS. **1** and **1**A, the torque vanes **30** in this preferred embodiment are removed from the propelling thrust of the rocket **12** by eroding. The erodible vanes **30** are inserted though the nozzle body of the rocket **12** for securing or anchoring the vanes **30**. Individually molded torque vanes **30** are incorporated into the rocket spin control system **10**. Each of the erodible vanes **30** are identical to the other removable vanes **30** in the set.

The erodible vanes **30** comprise a material and vane configuration to provide consistent torque performance. The erodible vanes **30** comprise an appropriate erodible material, preferably a thermoplastic or phenolic material such as polycarbonate or nylon. The selection of the material is determinable by those skilled in the art for a material that effectively erodes during the expected 0.07 seconds of operation of the erodible vanes **30**. During launch, the erodible vanes **30** are not needed to slow the rocket spin because the torque shut-offs at launcher tube **14** exit with the removal of the vanes **30**. The erodible vanes **30** may be formed integrally into the rocket **14** or inserted into the rocket nozzle **20** through slots **16**. Use of the slot **16** arrangement of attachment for extending the erodible vanes **30** through the nozzle **20** body prevents ejection of the erodible vanes **30**. Any appropriate number of erodible vanes **30** may be used, preferably from about 20 or less, and more preferably from about 18 to about 16 erodible vanes **30** are used.

Preferably, the erodible vanes **30** provide an average of 10 ft.-lbs. torque for 0.07 seconds, which equates to expected rocket **12** exit from the launcher. The erodible vanes **30**, in combination with the nozzle **20**, preferably spin the rocket to 40 Hz, which minimizes the effects of thrust misalignment. As the rocket **12** exits the launch tube **14**, the rocket **12** possesses low forward velocity and minimal gyroscopic stability. Perturbation, such as thrust misalignments and side winds, have a significant influence on the rocket's flight direction. As the erodible vanes **30** shut-off the torque at launcher exit, the rocket spin rate does not exceed its first bending mode frequency (50–60 Hz) which would have a catastrophic effect on the rocket **12**.

Referring to FIGS. **2** and **2**A, the torque vanes **30** in this preferred embodiment are removed from the propelling thrust of the rocket **12** by retracting. Preferably, the removable vanes **30** are retracted prior to the rocket **12** exiting the tube **14**. The retractable vanes **30** comprise any suitable material for influencing rocket torque and spin rate, preferably a low ablative material, and more preferably steel. The selection of the material is determinable by those skilled in the art for a material that experiences minimal ablation during the expected 0.07 seconds of operation of the retractable vanes **30**. The steel retractable vanes **30** are inserted through slots **16** in the nozzle **20** body. Preferably, the slots **16** are lined with an appropriate material effective to seal against the rocket **12** exhaust, such as having rubber gaskets within the slots **16**. The retractable vanes **30** are held in place with blades **18** made of a resilient material, such as steel, which are preferably spring loaded. In the open position, the steel blades **18** allow the retractable vanes **30** to retract to be flush with the inner surface of the nozzle **20** body. This prevents gas flow through the nozzle **20** body slots **16** after the retractable vanes **30** are retracted from the rocket **12** exhaust flow. This slot **16** arrangement of attachment for extending the retractable vanes **30** through the nozzle **20** body prevents ejection of the retractable vanes **30**. In a preferred embodiment, the placement of the rocket **12** into the launch tube **14** forces the retractable vanes **30** through the body of the nozzle **20**. As the rocket **12** leaves the launch tube **14**, the combined action of the centrifugal force and spring acting on the steel blades **18** pivots the retractable vanes **30** and removes the retractable vanes **30** from the exhaust flow of the rocket **12**. Any appropriate number of retractable vanes **30** may be used, preferably from about 20 or less, and more preferably from about 18 to about 16 retractable vanes **30** are used. The steel retractable vanes **30** do not retract during the 0.07 seconds that the retractable vanes **30** are exposed to the rocket **12** exhaust as the rocket **12** transits through the launch tube **14**.

The removable vanes **30** impart an appropriate rocket spin and torque to the rocket as determinable by those skilled in the art. Preferably the imparted rocket spin comprises a rate of from about 20 hertz or more, more preferably from about 30 hertz or more, and most preferably from about 40 hertz to about 50 hertz. Preferably, the generated torque of the removable vanes **30** onto the rocket **12** ranges from about 10 foot-pounds or more, more preferably from about 15 foot-pounds to about 20 foot-pounds, and most preferably from about 18 foot-pounds to about 20 foot-pounds.

The dimensions of the removable vanes **30** preferably range from about 0.5 inches to about 0.7 inches in length (L), from about 0.06 inches to about 0.12 inches in width (W), and from about 0.2 inches to about 0.3 inches in depth (D). The removable vanes **30** extend approximately 0.2 inches to about 0.3 inches into the rocket nozzle **20**. The removable torque vanes **30** are particularly suitable on the 2.75 inch rocket.

In operation, the rocket spin control system **10**, previously described, imparts spin on the rocket **12** and removes the vanes **30** prior to, concurrent with, or immediately following, launch of the rocket **12** from the launch tube **14**. Preferably the removable vanes **30** are removed prior to rocket **12** exist from the launch tube **14**. Times periods for removable vanes **30** removal preferably range from about 100 milliseconds or less, and more preferably from about 80 milliseconds or less. The rapid spin produced onto rocket **12** eliminates launch imprecision that occurs from thrust misalignment of the rocket nozzle **20** and motor joint. The rapid spin minimizes the precision error contribution by averaging out the thrust misalignment. The present invention achieves higher torque capability and better torque vane attachment than previously known.

EXAMPLE 1

A precision analysis from a ground launch perspective was completed that predicted that the 2.75-Inch Rocket with erodible vanes in the rocket nozzle improved the rocket precision error from about 19-milliradians to about 5-milliradians.

EXAMPLE 2

(Prophetic)

The precision of the 2.75-Inch Rocket is improved with the incorporation of retractable vanes. With incorporation of eight retractable vanes in the nozzle of the 2.75-Inch Rocket, the rocket spin at launcher exit increases from 8 hertz to 40 hertz. The retractable vanes are inserted into the nozzle with placement of the rocket into the launch tube. The steel retractable vanes are inserted through slots in the body of the nozzle. At approximately 0.7 seconds from firing of the rocket, nozzle torque is shut-off at launcher exit. This occurs with the retractable vanes becoming flush with the inner surface of the nozzle body.

The 2.75-Inch Rocket Motor with the retractable vane is fired at a target with no effect on ballistic performance. The increased spin rate averages out thrust misalignment. The retractable vanes increase the rocket precision by approximately 360%.

EXAMPLE 3

(Prophetic)

The precision of the 2.75-Inch Rocket is improved with the incorporation of erodible vanes. With incorporation of ten erodible vanes in the nozzle of the 2.75-Inch Rocket, the rocket spin at launcher exit increase from 8 hertz to 40 hertz. The erodible vanes are inserted into the nozzle with placement of the rocket into the launch tube. The thermoplastic erodible vanes are inserted through slots in the body of the nozzle. At approximately 0.7 seconds from firing of the rocket, nozzle torque is shut-off at launcher exit. This occurs with the erodible vanes disintegrating from the heat and flow of the rocket exhaust.

The 2.75-Inch Rocket Motor with the retractable vane is fired at a target with no effect on ballistic performance. The increased spin rate averages out thrust misalignment. The erodible vanes increase the rocket accuracy by approximately 360%.

EXAMPLE 4

(Comparative)

The rocket spin rate of the 2.75-Inch Rocket was increased to over 20 Hz with a molded plastic ring with erodible torque vanes. The molded plastic ring was glued into the end of the nozzle body. The plastic ring ejected from

the 2.75-Inch Rocket about 50 percent of the time, causing hazardous debris. The molded plastic ring was difficult to manufacture, particularly with regard to releasing the plastic ring from its mold.

The foregoing summary, description, examples and drawings of the invention are not intended to be limiting, but are only exemplary of the inventive features which are defined in the claims.

What is claimed is:

1. A rocket spin control system for a tube launched rocket with propelling thrust, comprising:

a fixed position nozzle on the rocker,

a set of internally positioned vanes inside of the fixed position nozzle, located aft of rocket propelling thrust, that impart rapid spin to the rocket from rocket ignition to exit of the rocket from the tube; and,

means for removing the vanes, wherein the vanes are removed from the rocket propelling thrust at rocket exit from the tube.

2. The rocket spin control system of claim **1**, wherein the means for removing the vanes comprises removable vanes selected from the group consisting of retractable vanes and erodible vanes.

3. The rocket spin control system of claim **2**, wherein the removable vanes are retractable vanes.

4. The rocket spin control system of claim **3**, wherein the retractable vanes generate a torque of from about 10 foot-pounds or more.

5. The rocket spin control system of claim **4**, wherein the retractable vanes generate a torque of from about 15 foot-pounds to about 20 foot-pounds.

6. The rocket spin control system of claim **3**, wherein the retractable vanes generate a torque of from about 18 foot-pounds to about 20 foot-pounds.

7. The rocket spin control system of claim **2**, wherein the removable vanes are erodible vanes.

8. The rocket spin control system of claim **7**, wherein the erodible vanes are formed integrally into the rocket.

9. The rocket spin control system of claim **7**, wherein the erodible vanes are inserted into the rocket nozzle.

10. The rocket spin control system of claim **7**, wherein the erodible vanes comprise a thermoplastic material.

11. The rocket spin control system of claim **2**, wherein the removable vanes impart a rocket spin of from about 20 hertz or more.

12. The rocket spin control system of claim **11**, wherein the removable vanes impart a rocket spin of from about 30 hertz or more.

13. The rocket spin control system of claim **12**, wherein the removable vanes impart a rocket spin of from about 40 hertz to about 50 hertz.

14. The rocket spin control system of claim **1**, wherein the rocket comprises a 2.75 inch rocket.

15. A method for imparting a spin on a rocket, comprising the steps of:

providing a rocket spin control system for a tube launched rocket comprising a fixed position nozzle on the rocket a set of internally positioned vanes inside of the fixed position nozzle, located aft of rocket propelling thrust, that impart rapid spin to the rocket from rocket ignition to exit of the rocket from the tube, and means for removing the vanes; and,

launching the rocket from the tube, wherein the internally positioned vanes are removed at rocket exit from the tube.

16. The method of claim **15**, wherein the vanes are eroded prior to the rocket exiting the tube.

17. The method of claim **16**, wherein the vanes are eroded within a time period of from about 100 milliseconds or less.

18. The method of claim **16**, wherein the vanes are eroded within a time period of from about 80 milliseconds or less.

19. The method of claim **15**, wherein the vanes are retracted upon the rocket exiting the tube.

* * * * *