US006371200B1

(12) **United States Patent**
Eaton

(10) **Patent No.: US 6,371,200 B1**
(45) **Date of Patent: Apr. 16, 2002**

(54) **PERFORATED HEAT SINK**

(75) Inventor: **Deran S. Eaton**, Waldorf, MD (US)

(73) Assignee: **The United States of America as represented by the Secretary of the Navy**, Washington, DC (US)

(*) Notice: Subject to any disclaimer, the term of this patent is extended or adjusted under 35 U.S.C. 154(b) by 0 days.

(21) Appl. No.: **09/922,538**

(22) Filed: **Aug. 3, 2001**

Related U.S. Application Data

(62) Division of application No. 09/443,120, filed on Nov. 18, 1999, now Pat. No. 6,110,306.

(51) **Int. Cl.**[7] **F28F 7/00**; H05K 7/20

(52) **U.S. Cl.** **165/80.3**; 165/185; 165/104.33; 361/690

(58) **Field of Search** 165/80.3, 185, 165/104.33; 361/690, 692, 702, 709, 697; 257/722; 415/115

(56) **References Cited**

U.S. PATENT DOCUMENTS

2,834,582 A * 5/1958 Kablitz 165/185
4,541,004 A * 9/1985 Moore 257/706
5,000,254 A * 3/1991 William 165/80.3
5,049,982 A * 9/1991 Lee et al. 257/722
5,224,538 A * 7/1993 Jacoby 165/185
5,734,552 A * 3/1998 Krein 165/80.3
5,854,739 A * 12/1998 Steiner et al. 165/80.3
5,884,691 A * 3/1999 Batchelder 165/80.3
5,915,463 A * 6/1999 Romero et al. 165/80.3
6,201,699 B1 * 3/2001 Ayres et al. 174/16.3
6,223,815 B1 * 5/2001 Kazuya 165/185

FOREIGN PATENT DOCUMENTS

JP 200022364 * 1/2000

* cited by examiner

Primary Examiner—Henry Bennett
Assistant Examiner—Tho Van Duong
(74) *Attorney, Agent, or Firm*—Mark Homer

(57) **ABSTRACT**

A compact perforated heat sink having high heat dissipation has a substrate with a multitude of holes and a thermal conductive pathway to conduct heat from a heat source to the substrate. The surface area of the holes is equal to or greater than the surface area of the substrate without the holes.

15 Claims, 2 Drawing Sheets

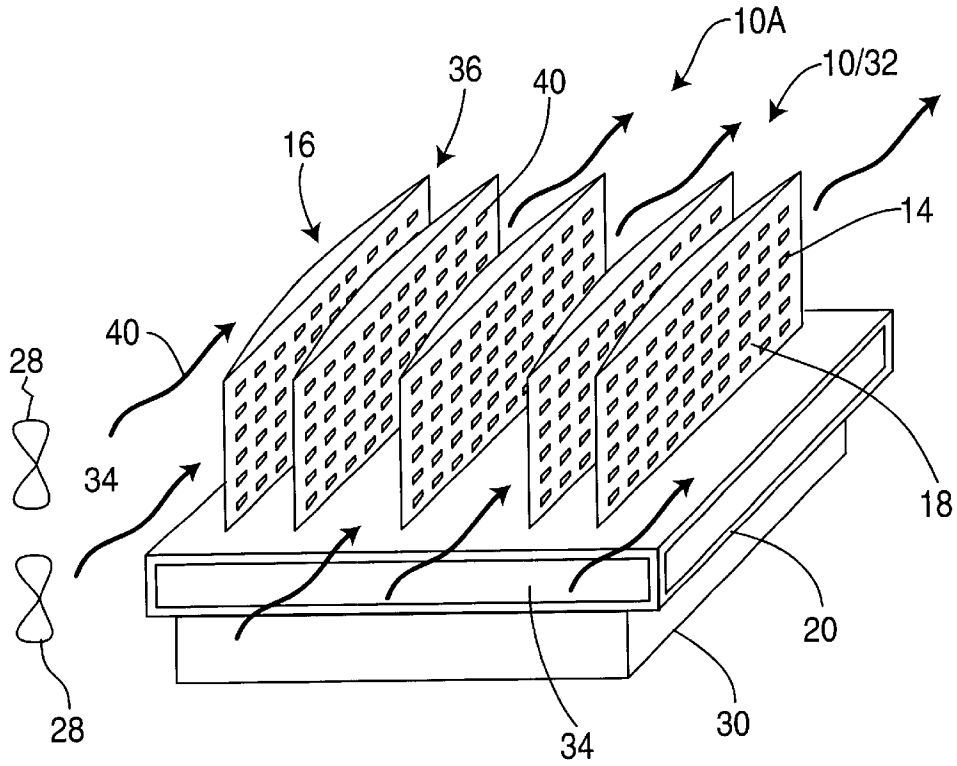

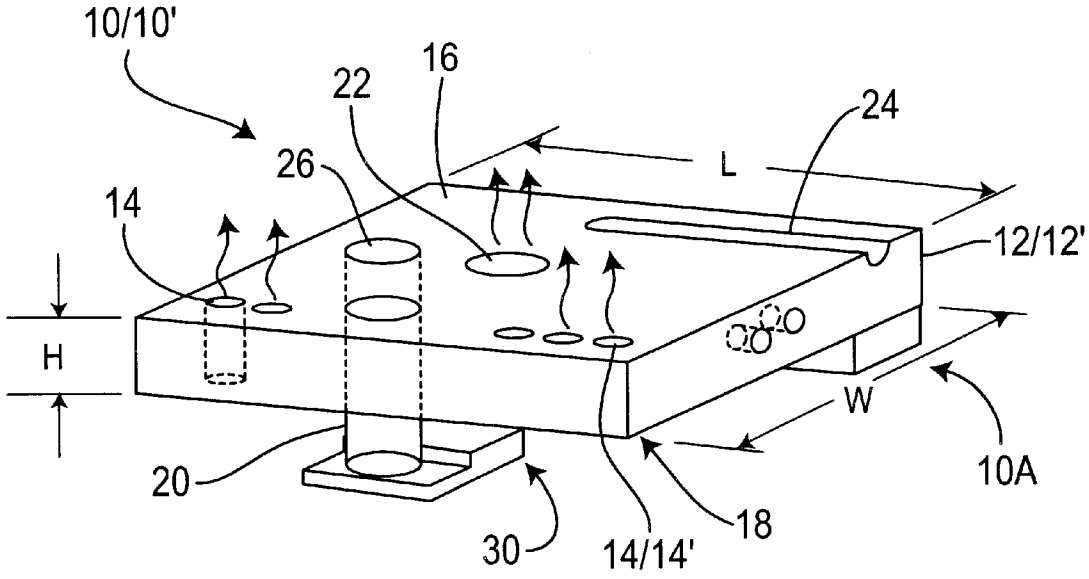
10/10'
16
22
24
26
L
14
12/12'
H
W
10A
20
18
30
14/14'

FIG. 1

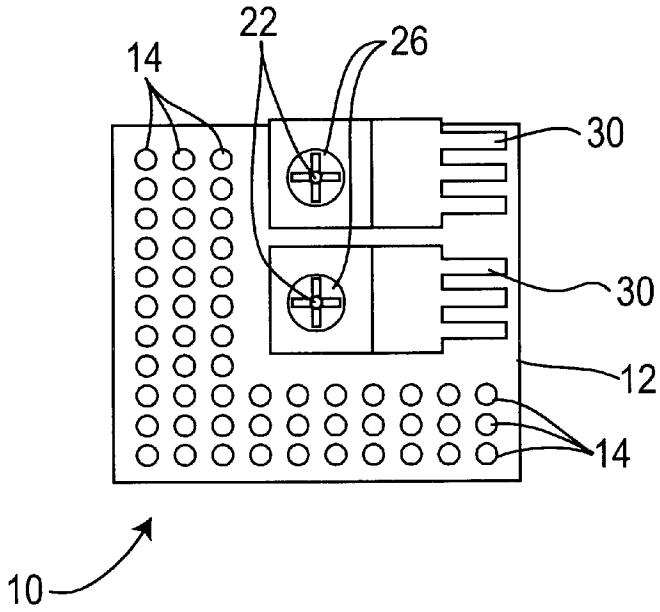
22
26
14
30
30
12
14
10

FIG. 1A

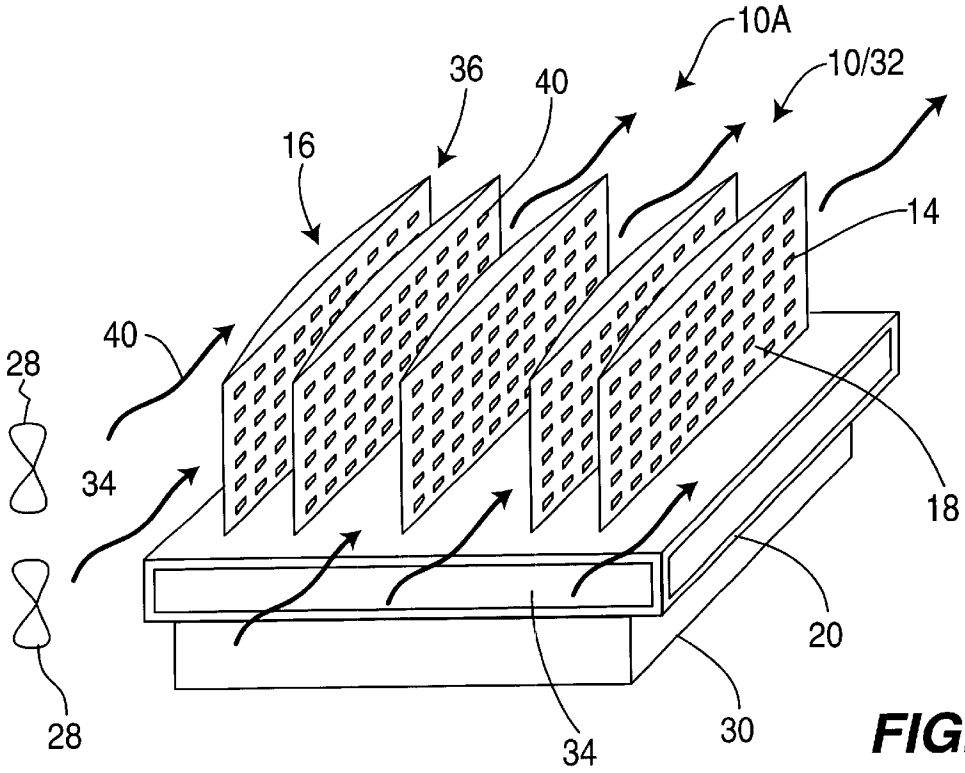

FIG. 2

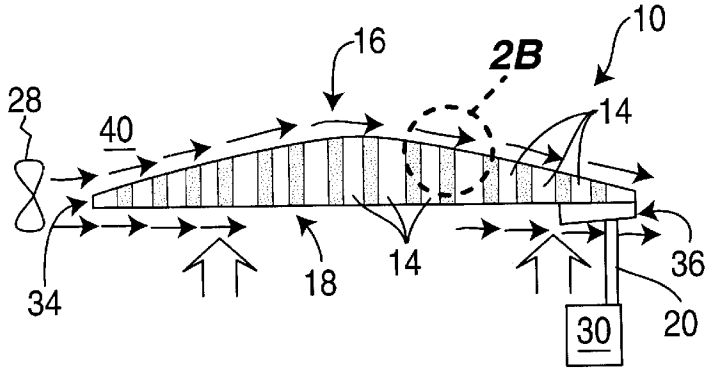

FIG. 2A

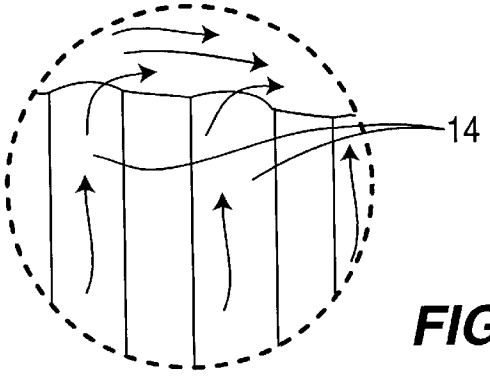

FIG. 2B

PERFORATED HEAT SINK

This application is a division of pending application Ser. No. 09/443,120, filed Nov. 18, 1999 now U.S. Pat. No. 6,110,306.

STATEMENT REGARDING FEDERALLY SPONSORED RESEARCH OR DEVELOPMENT

The invention described herein may be manufactured and used by or for the government of the United States of America for governmental purposes without the payment of any royalties thereon or therefor.

BACKGROUND OF THE INVENTION

1. Field of the Invention

The present invention includes a perforated heat sink. More particularly, the present invention includes a compact heat sink having a plurality of holes within a substrate to thermally conduct heat away from a heat source. Most particularly, the holes within the compact heat sink increase the surface area of the substrate for dissipating heat by a factor of two from the substrate without the holes.

2. Brief Description of the Related Art

Types of known thermal management technologies include thermoelectric conduction (TEC), heat pipes, and extruded/bonded fin heat sinks.

Thermoelectric conduction uses DC electricity inside an active cooling device, typically having a finned heat sink sandwiched between two plates, with DC power driving the Peltier effect between the plates. As an active device, the thermoelectric conduction device may be made to function compactly and economically, however, power consumption is generally required on an order of amps at digital electronics voltages (3.3 VDC, 5 VDC) which is outside of the range of battery-driven applications.

Heat pipes are often found with liquid cooling systems, where the heat pipes provide passive fluid conduction. Heat pipes are often bulky and fragile unless embedded in a substrate, which is generally impractical for confined spaces.

Extruded/bonded fin heat sinks are the most common type of thermal management device, which sometimes uses an attached fan. Generally the fin configuration of these devices occupies too much physical volume to be practical in extremely confined spaces. The conventional fin arrays, because of their jagged shapes, frequently cause turbulent air patterns that unevenly cool parts of the heat sink and the device to which it attaches.

Several patents have addressed the use of heat sinks. U.S. Pat. No. 5,146,981 (Samarov) discloses a heat sink with a plurality of holes, however, these holes appear to be haphazardly placed within the heat sink and are covered at one end. U.S. Pat. No. 5,552,634 (Schneider) discloses a heat sink with a plurality of pegs that may form multiple layers. U.S. Pat. Nos. 5,814,536 and 5,869,891 (Rostoker et al.) disclose a heat sink with fins, holes, protrusions, and grooves or depressions to increase the surface area of the fins of a heat sink. U.S. Pat. No. 5734552 (Krein) discloses an inverted airfoil configuration for a heat sink, however, the disclosed airfoil does not use holes for heat dissipation. None of these references discloses a maximized surface area with holes for heat transfer into and away from the heat sink.

There is a need in the art to provide a compact, thermally conductive system for electronic systems. The present invention addresses this and other needs.

SUMMARY OF THE INVENTION

The present invention includes a compact perforated heat sink having high heat dissipation consisting essentially of at least one substrate forming a plurality of holes therein, wherein the surface area of the substrate with the holes is equal to or greater than the surface area of the substrate without the holes, wherein heat flows through the holes, and means for thermal conductivity attached to the substrate capable of conducting heat away from a heat source into the substrate.

The invention further includes a perforated heat sink, in the shape of an airfoil, having high heat dissipation consisting essentially of at least one substrate having a first side and second side forming an airfoil having a leading edge and trailing edge, the substrate forming a plurality of holes therein, wherein the surface area of the substrate with the holes is equal to or greater than the surface area of the substrate without the holes, wherein heat flows through the holes, and means for thermal conductivity attached to the at least one substrate capable of conducting heat from a heat source to the at least one substrate and means for creating a substantially unidirectional fluid flow onto the leading edge, wherein lift is created within the plurality of holes.

Additionally, the present invention includes a method for dissipating heat from an electronic component, comprising the step of providing a compact perforated heat sink having high heat dissipation consisting essentially of at least one substrate forming a plurality of holes therein, wherein the surface area of the substrate with the holes is equal to or greater than the surface area of the substrate without the holes, wherein heat flows through the holes, and means for thermal conductivity attached to the at least one substrate capable of conducting heat from a heat source to the at least one substrate and conducting heat into the substrate through the means for thermal conductivity wherein the heat dissipates through the holes.

Furthermore, the present invention includes a dissipated heat product formed by the process comprising the steps of providing a compact perforated heat sink having high heat dissipation consisting essentially of at least one substrate forming a plurality of holes therein, wherein the surface area of the substrate with the holes is equal to or greater than the surface area of the substrate without the holes, wherein heat flows through the holes, and means for thermal conductivity attached to the at least one substrate capable of conducting heat from a heat source to the at least one substrate and conducting heat into the substrate through the means for thermal conductivity wherein the heat dissipates through the holes.

A composite heat sink may be formed from a plurality of compact perforated heat sinks, such as in a stacked formation including thermally conductive standoffs. The compact heat sinks may be used in any appropriate device, and are particularly useful in electronics systems.

BRIEF DESCRIPTION OF THE DRAWINGS

FIG. **1** illustrates a heat sink of the present invention, with an ERGM-ST application of the heat sink having a single heat sink to cool two TO-220 devices shown in a bottom view illustration in FIG. **1**A; and,

FIG. **2** illustrates a composite heat sink utilizing multiple heat sinks of FIG. **1** that have airfoil designs, with FIGS. **2**A and **2**B showing the airflow of the airfoil design.

DETAILED DESCRIPTION OF THE PREFERRED EMBODIMENT

The present invention includes a perforated heat sink that is particularly useful in compact spaces. The perforated heat

sink significantly increases the surface area of heat dissipation without the necessity of increased size that would be detrimental to use in compact systems. Holes within the structure of the heat sink at least double the surface area of thermal dissipation while permitting sufficient area between the holes to ensure proper heat flow within the heat sink. As the surface area of the compact heat sink thermally conducts heat away from a heat source, heat within the heat sink is uniformly maintained. The present invention is particularly useful in the United States Navy's Extended Range Guided Munition Smart Trainer (ERGM-ST), manufactured by Naval Sea Systems Command, Indian Head Division of Indian Head, Maryland, more particularly when mated with multiple TO-220 (or similar) electronics packages of UA7805 power regulators that channel 9 VDC and 12 VDC power into 5 VDC at approximately 1.00 A.

As seen in FIG. **1**, a compact perforated heat sink **10** of the present invention includes at least one substrate **12** having a plurality of holes **14** within the substrate **12**. The holes **14** within the perforated heat sink **10** increase the surface area **12'** of the substrate **12** by at least a factor of two. With the holes **14**, the added hole surface area **14'** of the holes **14** in the perforated heat sink **10** is equal to or greater than the substrate surface area **12'** of the substrate **12** without the holes **14**. The holes **14** are arranged in an extremely efficient, geometrically planned heat transfer configuration, described below, that permits a high heat dissipation without increasing the size of the perforated heat sink **10**.

The heat sink **10** dissipates the accumulated heat from a heat source **30**. The heat source **30** preferably comprises an electrical system or component, such as a chip, circuit board, and the like, that is located in a confined space. As the component, i.e., heat source **30**, emits heat within the confined space, the heat must be dissipated from the confined space to prevent deterioration of chip performance within the electrical system. The heat sink **10** cools the chip through a,heat transfer medium or means for thermal conductivity **20**, which is physically attached, and thermally connected, to the chip. With the heat source **30** attached to the means for thermal conductivity **20**, which in turn is attached to the substrate **12**, heat is transferred from the heat source **30** to the substrate **12**. The means for thermal conductivity **20** conducts heat from, and away from, the heat source **30** into the substrate **12** of the heat sink **10**. The means for thermal conductivity **20** includes thermally conductive bridges or pathways, standoffs, attached substrates, and other like devices which may be selected by those skilled in the art. The means for thermal conductivity **20** may also include mounting screws **22** within mounting holes **26** which mount the heat source **30** to the heat sink **10**, with the mounting screws **22** possessing thermal conductivity to transfer heat from within the electrical system to the heat sink **10** to dissipate the heat. Once heat has transferred from the heat source **30** to the heat sink **10**, the heat sink **10** dissipates heat into a fluid medium, which may include any known heat transfer fluid medium, including for example, air and gases (including forced air), and liquids such as water, anti-freeze and the like. The fluid medium may be flowed, forced or otherwise transited across and/or against the present invention for proper heat conduction.

Preferably, the heat sink **10** has opposing sides, such as a first side **16** and second side **18**, with the holes **14** formed and extended therein. More preferably, the holes **14** extend from the first side **16** to the second side **18** of the substrate **12**, allowing an open conduit between the two sides **16** and **18**. The plurality of holes **14** are preferably formed substantially perpendicular to both the first side **16** and the second side **18** of the substrate **12**. The diameter of each hole **14** is preferably substantially equal to the other holes **14**, with the holes **14** separated from each other by a distance of at least fifty percent of the diameter of the holes **14**. Additionally, the holes **14** are placed at least a distance of the diameter of a hole **14** away from the mounting holes **26** and no hole **14** is placed within a distance of the diameter of a hole **14** to any substrate **12** edge. This configuration of the holes **14** allows efficient thermal conductivity and structural integrity within the substrate **12** while at least doubling the surface area **12'** of the substrate **12** with the added surface area **14'** of the holes **14**. Efficiency of the thermal conductivity and structural integrity are further enhanced within the substrate **12** with the holes **14** separated from any side edge by a distance of at least equal to or greater than the diameter of the holes **14**.

Calculation of the total surface area **10'** of the heat sink **10**, i.e., the surface area **12'** of the substrate **12** with the added surface area **14'** of the holes **14**, is derived from equation 1, below:

$$\text{Total Surface Area}_{Heat\ Sink} = tSA_{plate} - SAR_M - SAR_P + SAX_P \quad (1)$$

where:

tSA_{plate} is the total surface area of the substrate **12** without holes, with $tSA_{plate}=2(HL+HW+LW)$, with H, L and W defined as the height, length, and width, respectively;

SAR_M is the surface area removed for the mounting holes, with $SAR_M=N_M\pi r_M^2$, with N_M being the number of mounting holes **26**, and r_M being the mount hole **26** radius. Only half the surface area is used to account for the covering with mounting screws on the top side of the mounting holes **26**. Heat transfer occurs through the hole but as a factor of the covering screw **22**, not the mounting hole **26**.

SAR_P is the surface area removed with the formation of the holes **14**, where $SAR_P=2N_P\pi r_P^2$, with N_P being the number of holes **14**, and r_P being the hole **14** radius (generally the hole radius **14** is about 25% of the mounting hole (M) radius); and,

SAX_P is the increase surface area exposed from the holes **14**, where $SAX_P=2r_P\pi H$ for round holes **14**, with the surface area calculation changed for different hole **14** geometries with such calculations determinable by those skilled in the art.

The substrate **12** comprises any suitable thermally conductive material, preferably a metal material, with the proper selection of material determinable by those skilled in the art. More preferably, the metal material of the substrate **12** comprises a thermally conductive metal of aluminum, copper, steel, brass or combinations thereof. Most preferably, the conductive material comprises aluminum.

The heat sink **10** may include additional heat dissipating components **24** that do not interfere with, and preferably increase, the efficient function of the heat sink **10**. These heat dissipating components **24** in the heat sink **10** may include grooves, different hole **14** geometries, or other like recesses in the substrate **12** for heat dissipation, and/or compartment area fit, of the heat sink **10**, as determined by those skilled in the art. Grooves may be routed, extruded or molded into the heat sink **10**. Projections and types of extensions, such as fins, may also be included in the heat sink **10** in a manner that does not interfere with the proper functioning of the heat sink **10**, i.e., the fins may compliment the heat dissipation features of the heat sink **10**. Additionally, the shape of all or part of the heat sink **10** may comprise any appropriate shape for use within a confined, i.e., compact, space, such as a

sphere, cylinder, or other configuration, with the proper form, dimensions, type, size, and other shape characteristics of the heat sink **10** being determinable by those skilled in the art. Use of the heat dissipating components **24** are used in a non-interfering manner with the hole **14** in the substrate **12**, i.e., the holes **14** are not intersected or altered with the heat dissipating components **24** such that the increased area increases the surface area to less than 50% of the non-altered substrate **12**.

A preferred embodiment of the heat sink **10** of FIG. **1** is shown in FIG. **1**A, which illustrates the heat sink **10** applied to the ERGM-ST with combination of a single heat sink **10** to cool two TO-220 devices **30**. For use in the ERGM-ST, the heat sink **10** comprises an aluminum substrate **12** having a height (H) of approximately 0.123 inches (0.318 cm), a width (W) of approximately 0.750 inches (1.905 cm) and a length (L) of approximately 1.00 inches (2.540 cm). The holes **14** measure approximately 0.025 inches (0.064 cm) in diameter, with the mounting holes **26** measuring approximately 0.120 inches (0.305 cm) in diameter.

As seen in FIG. **2**, a composite heat sink **10**A may be formed from a plurality of perforated heat sinks **10** in the form of an airfoil, which preferably are stacked, and more preferably stacked with thermally conductive standoffs **20**. Stacking the airfoil **10** greatly enhances the performance of the individual heat sinks **10**. The heat sink **10** or composite heat sink **10**A allows servicing of multiple heat sources **30** scaled to accommodate a single or multiple thermally conductive standoffs **20** or a like number of mounting holes **26** for connecting multiple heat sources **30**. Even dispersion of heat across several heat sinks **10** increases the reliability of the heat source **30**, i.e., electronics.

As further seen in FIGS. **2** and **2**A, the preferred embodiment the heat sink **10** comprises the shape of an airfoil having the plurality of holes **14** extending through the cross-section of the airfoil. The airfoil heat sink **10** comprises a substrate **12** that is formed between a leading edge **34** and trailing edge **36** with a means for creating a substantially unidirectional fluid flow **28** of a fluid medium **40** onto the leading edge **34** of the airfoil **10** to create lift within the plurality of holes, using Bernoulli's Law to increase convection. As shown in FIGS. **2**A and **2**B, differential fluid pressure such as air pressure, or lift, is caused by a low-pressure zone being created on the first side **16** or curved surface of the airfoil where the air **40** (or other suitable fluid medium **40**) is traveling faster than the air on the second side **18** or straight surface of the airfoil **10**. This causes the pressure on the first side **16** to drop, creating lift. Surrounding fluid medium **40** flows up through the holes **14** from the pressure differential, adding in the heat dissipation of the airfoil heat sink **10**. The lift effect removes heat away from the heat sink **10**, while increasing contact of the heat sink **10** with cooler fluid medium **40**. The airfoil **10** may be placed in any suitable location and/or position to cool the heat source **30**, with the proper orientation of the airfoil **10** determinable by those skilled in the art in light of design constraints on spacing, compartment size, fluid flow, adhesion/contact to the heat source **30**, and other like factors. The means for creating a substantially unidirectional fluid flow **28** may include fans for air or gases, pumps and/or nozzles for liquids such as water, gravitational designs, or other similar known devices or methods used to force unidirectional flow of fluid medium **40** against the leading edge **34** of the airfoil **10**. The airfoil **10** generates a smoother and more uniform flow than conventional fin designs.

In use, the heat sink **10** receives heat from a circuit board **30** through aluminum standoffs **20**. The heated heat sink **10** heats the air **40** within the holes **14**, causing the air **40** within the holes **14** to rise, shown in FIG. **2**B. The mounting screws **22** (shown in FIG. **1**A) also dissipate heat. The rising warm air **40** generates convection that pulls cool air **40** through the holes **14**, where the incoming cool air **40** is heated and rises. A continuous cycle is formed as long as the heat sink **10** remains heated. Conducting heat from the heat source **30** into the heat sink **10** produces rapid heat reduction within the heat source **30** while maintaining the structural integrity of the heat sink **10**, without the necessity of using fans or other such devices.

In use, the heat sink **10** receives heat from a circuit board **30** through aluminum standoffs **20**. The heated heat sink **10** heats the air **40** within the holes **14**, causing the air **40** within the holes **14** to rise, shown in FIG. **2**B. The mounting screws **26** also dissipate heat. The rising warm air **40** generates convection that pulls cool air **40** through the holes **14**, where the incoming cool air **40** is heated and rises. A continuous cycle is formed as long as the heat sink **10** remains heated. Conducting heat from the heat source **30** into the heat sink **10** produces a rapid heat reduction within the heat source **30** while maintaining the structural integrity of the heat sink **10**, without the necessity of using fans or other such devices.

EXAMPLES

The heat sink of the present invention (with approximately 200 holes) was tested against conventional heat sinks. A comparable conventional fin-type heat sink, a Sylvania-type ECG 402 TO-220 aluminum heat sink, was used as a control. Temperatures were recorded using a Dallas Semiconductor DS1621 electronic temperature sensor (thermometer), with associated software running under Window 95. The thermometer had a nominal upper sensor limit of 262.4° F. (128° C.). Times were measured with a stopwatch for cool down time and boiling time. The surface area of the heat sink of the present invention was approximately 1.84 in^2 (4.67 cm^2) and the surface area of the conventional heat sink was approximately 1.904 in^2 (4.84 cm^2). The surface area to volume ratio of the present invention was approximately 19.6 to 1 and approximately 13.02 to 1 for the conventional heat sink. The size of the heat sink of the present invention was approximately 0.094 in^3 (1.169 cm^3) and the size of the conventional heat sink was approximately 0.146 in^3 (2.397 cm^3). The average diameter of the holes was 0.025 in (0.064 cm). The heat sinks were affixed parallel to UA7805 power regulators for testing. Ambient temperature was 72.5° F. (22.5° C.).

With the UA7805 power regulators energized at 9 VDC, 1A, the temperature was measured at increasingly closer distances to the broadest side of the heat sink under test. Three distances were chosen for measurement, at 0.250 in., at 0.125 in., and in physical contact with the heat sink. The sensor was held for 10 seconds at each location. The results of the test are shown in Table 1, below.

TABLE 1

DISTANCE (Sensor to Heat Sink)	Heat Sink 200 holes (Present Invention)	Conventional Heat Sink (Prior Art)
0.250 inches	88.7° F. (31.5° C.)	82.4° F. (28.0° C.)
0.125 inches	145.4° F. (63.0° C.)	117.5° F. (47.5° C.)
Physical Contact	203.9° F. (95.5° C.)	203.9° F. (95.5° C.)

Warmer temperatures, at equal sensory distances, recorded for the heat sink of the present invention showed increased efficiency over the conventional heat sink. As expected, contact temperatures (with the energized

UA7805) for the two heat sinks were equal. The heat sink of the present invention was shown to be more efficient for drawing heat from the heat source.

Water Droplet Test

The physical contact temperature was identical per the sensor software's threshold before the DS1621 stopped responding. For further confirmation, a water droplet test was conducted. Water boils at 212° F. (100° C.).

Onto each hot heat sink, a drop of tap water was place on the broad side of the heat sink with the time of boil recorded. The heat sink of the present invention boiled the water in 12 seconds, and the conventional heat sink boiled the water in 14 seconds.

The Water Droplet Test showed the heat sink of the present invention dissipating more energy over a given period of time.

Cool Down Test

With the UA7805 shut off, the heat sink of the present invention cooled enough to handle in 1 minute 19 second (corners after 1 minute), and the conventional heat sink was cool enough to handle in 1 minute 20 seconds (edges after 1 minute 9 seconds).

The heat sink **10**, with greater compactness, was shown to dissipate heat as efficiently, or more efficiently, as a conventional heat sink. Heat sinks **10** may also be used in tighter spaces with equal or greater efficiency than conventional heat sinks. The heat sink **10** is easily manufactured, such as molded or extruded in any desired geometry and thickness, easy to scale with one or multiple heat sources **30** and generally possesses a smaller footprint, such as 0.144 in^2 (0.461 cm^2) for the TO-220, for installation. The heat sink **10** accommodates a greater number of heat sources **30** for a confined space.

The foregoing summary, description, and examples of the present invention are not intended to be limiting, but are only exemplary of the inventive features which are defined in the claims.

What is claimed is:

1. A compact perforated heat sink having high heat dissipation consisting essentially of:

at least one substrate forming a plurality of holes therein, wherein the surface area of the substrate with the holes is equal to or greater than the surface area of the substrate without the holes;

means for thermal conductivity attached to the at least one substrate capable of conducting heat from a heat source to the at least one substrate; and,

means to create unidirectional flow of air through the holes comprising a shape having an airfoil with top and bottom sides, both having surface areas, wherein the surface area of the top is greater than the surface area of the bottom.

2. The perforated heat sink of claim **1**, wherein the holes extend from a first side of the substrate to a second side of the substrate.

3. The perforated heat sink of claim **1**, wherein the substrate comprises a conductive material selected from the group consisting of aluminum, copper, steel and brass.

4. The perforated heat sink of claim **3**, wherein the conductive material comprises aluminum.

5. The perforated heat sink of claim **2**, wherein the plurality of holes are formed substantially perpendicular to both the first side and the second side of the substrate.

6. The perforated heat sink of claim **1**, wherein the diameter of each hole is substantially equal to the other holes.

7. The perforated heat sink of claim **1**, wherein the holes are separated from each other by a distance of at least 50 percent of the diameter of the holes.

8. The perforated heat sink of claim **7**, wherein the holes are separated from any side edge by a distance of at least equal to or greater than the diameter of the holes.

9. The perforated heat sink of claim **1**, further comprising a means for creating fluid flow.

10. A composite heat sink comprising a plurality of perforated heat sinks of claim **1**.

11. The composite heat sink of claim **10**, wherein the plurality of heat sinks are stacked.

12. The composite heat sink of claim **11**, wherein the stacked plurality of heat sinks are stacked with thermally conductive standoffs.

13. An electronics system comprising at least one perforated heat sink of claim **1**.

14. A method for dissipating heat from an electronic component, comprising the steps of:

providing a compact perforated heat sink having high heat dissipation consisting essentially of at least one substrate forming a plurality of holes therein, wherein the surface area of the substrate with the holes is equal to or greater than the surface area of the substrate without the holes, means for thermal conductivity attached to the at least one substrate capable of conducting heat from a heat source to the at least one substrate, and, means to create unidirectional flow of air through the holes comprising a shape having an airfoil with top and bottom sides, both having surface areas, wherein the surface area of the top is greater than the surface area of the bottom;

conducting air flow into the substrate through the means for thermal conductivity wherein the air flow contacts the top and bottom sides and the holes of the substrate.

15. A dissipated heat product formed by the process comprising the steps of:

providing a compact perforated heat sink having high heat dissipation consisting essentially of at least one substrate forming a plurality of holes therein, wherein the surface area of the substrate with the holes is equal to or greater than the surface area of the substrate without the holes, means for thermal conductivity attached to the at least one substrate capable of conducting heat from a heat source to the at least one substrate, and, means to create unidirectional flow of air through the holes comprising a shape having an airfoil with top and bottom sides, both having surface areas, wherein the surface area of the top is greater than the surface area of the bottom;

conducting air flow into the substrate through the means for thermal conductivity wherein the air flow contacts the top and bottom sides and the holes of the substrate.

* * * * *