US006349474B1

(12) **United States Patent**
Jordan

(10) **Patent No.: US 6,349,474 B1**
(45) **Date of Patent: Feb. 26, 2002**

(54) **CABLE CUTTER**

(75) Inventor: **Bruce D. Jordan**, La Plata, MD (US)

(73) Assignee: **The United States of America as represented by the Secretary of the Navy**, Washington, DC (US)

(*) Notice: Subject to any disclaimer, the term of this patent is extended or adjusted under 35 U.S.C. 154(b) by 0 days.

(21) Appl. No.: **09/584,200**

(22) Filed: **May 31, 2000**

(51) **Int. Cl.**[7] **B26D 1/04**

(52) **U.S. Cl.** **30/228**; 30/90.1; 30/241; 30/DIG. 4

(58) **Field of Search** ..... 30/228, 90.1, 92, 30/180, 277, 278, 241, DIG. 4

(56) **References Cited**

U.S. PATENT DOCUMENTS

3,643,329	A	*	2/1972	Lieberman	30/180
3,739,673	A	*	6/1973	Temple	30/92
3,763,738	A	*	10/1973	Temple	30/228
4,026,028	A	*	5/1977	Green	30/241
4,136,445	A		1/1979	Grubb	
4,180,351	A	*	12/1979	Orrill et al.	30/DIG. 4
4,521,963	A		6/1985	Lind et al.	
4,587,733	A	*	5/1986	Staempfli	30/278
5,172,479	A		12/1992	Keeton	
5,224,268	A		7/1993	Pemberton	
5,233,749	A		8/1993	Saito et al.	
5,272,811	A		12/1993	Armand	
5,341,572	A		8/1994	Michelson	
5,416,975	A		5/1995	Saito et al.	
5,598,635	A		2/1997	Saito	
5,722,170	A		3/1998	Smith	

* cited by examiner

Primary Examiner—Hwei-Slu Payer
(74) *Attorney, Agent, or Firm*—Mark Homer

(57) **ABSTRACT**

A cable cutter for cutting a cable by using an explosive event is provided. The cable cutter includes a main body and an initiator assembly connected to the main body. The main cutter includes a cutterjaw and a receptacle having an opening accommodating a cable, a longitudinal bore formed in the housing and connected to the receptacle and having an inner opening and an outer opening, a cutter blade having a cutting edge facing the inner opening and a base facing the outer opening, being inserted into the bore of the receptacle, and slidably moving toward the cutter jaw within the bore of the receptacle to cut a cable disposed within the receptacle and between the cutter jaw and the cutting edge of the cutter blade. The initiator assembly includes a coupler, a passageway formed within the coupler, a cap covering having a hole connected to the coupler, and an explosive material and detonator are inserted through the hole in the cap into the passageway. A cone shaped surface is extended from a circumferential inner surface of one end of the passageway to an opening of the coupler connected to the main body.

12 Claims, 14 Drawing Sheets

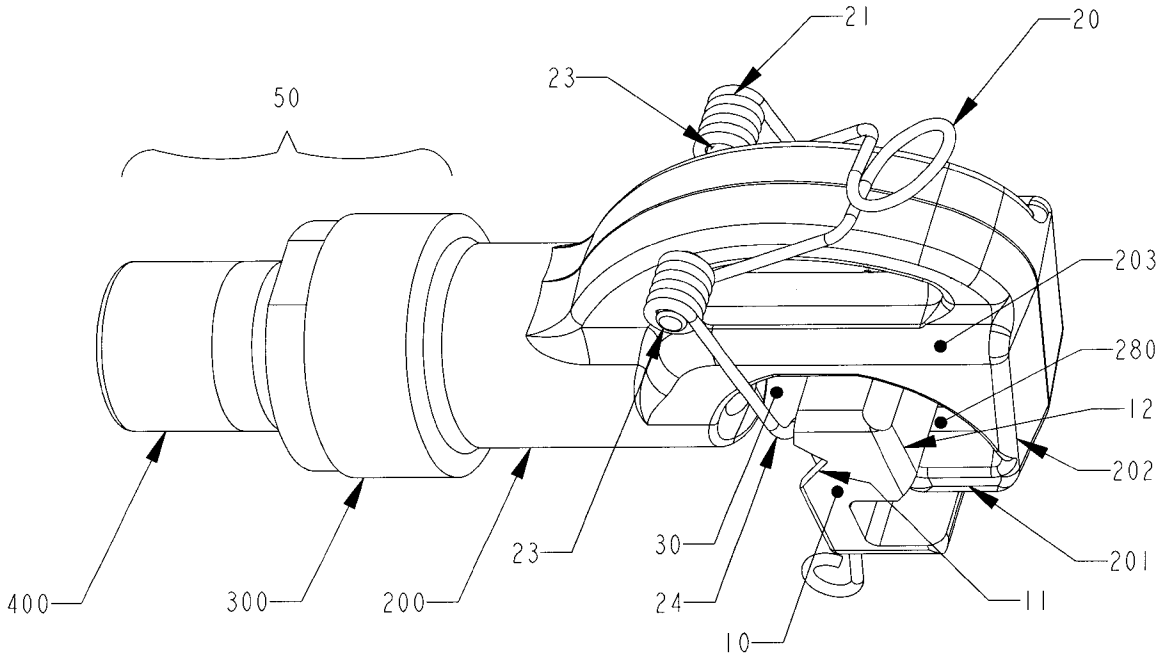

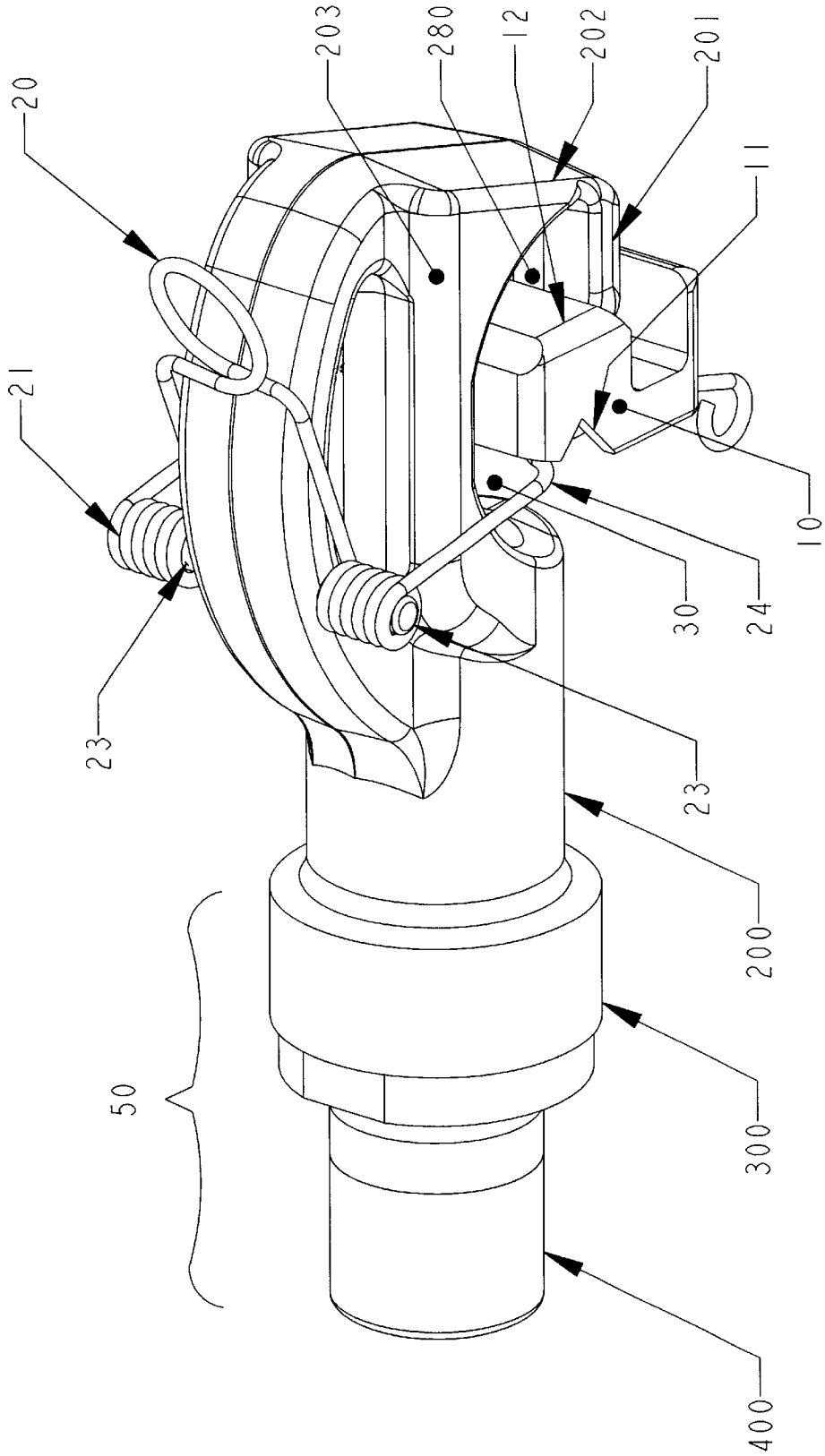

FIGURE 1

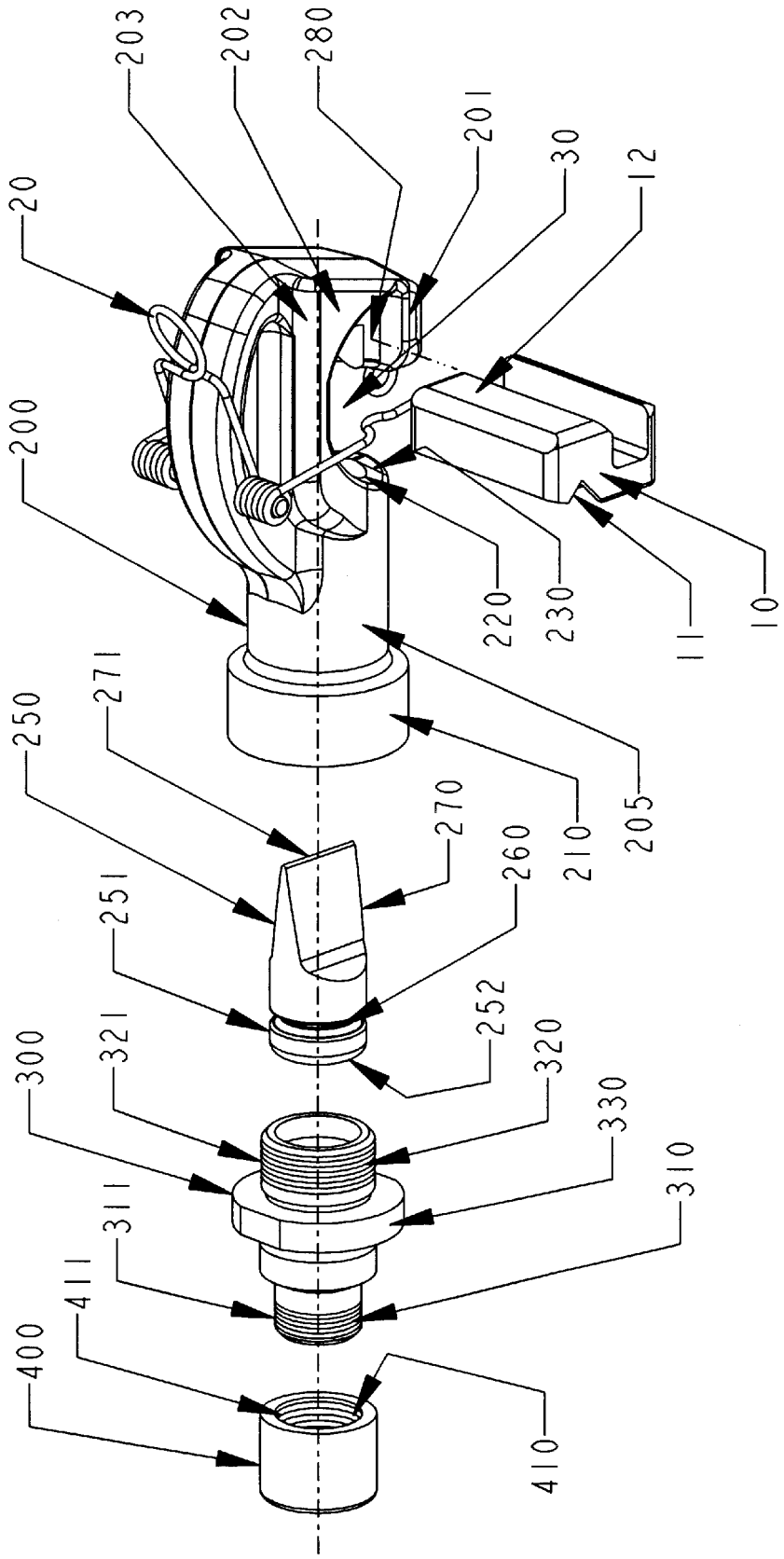
203
202
280
201
30
12
20
200
220
230
11
10
205
210
271
250
270
260
251
252
321
320
300
330
310
311
411
400
410

FIGURE 2

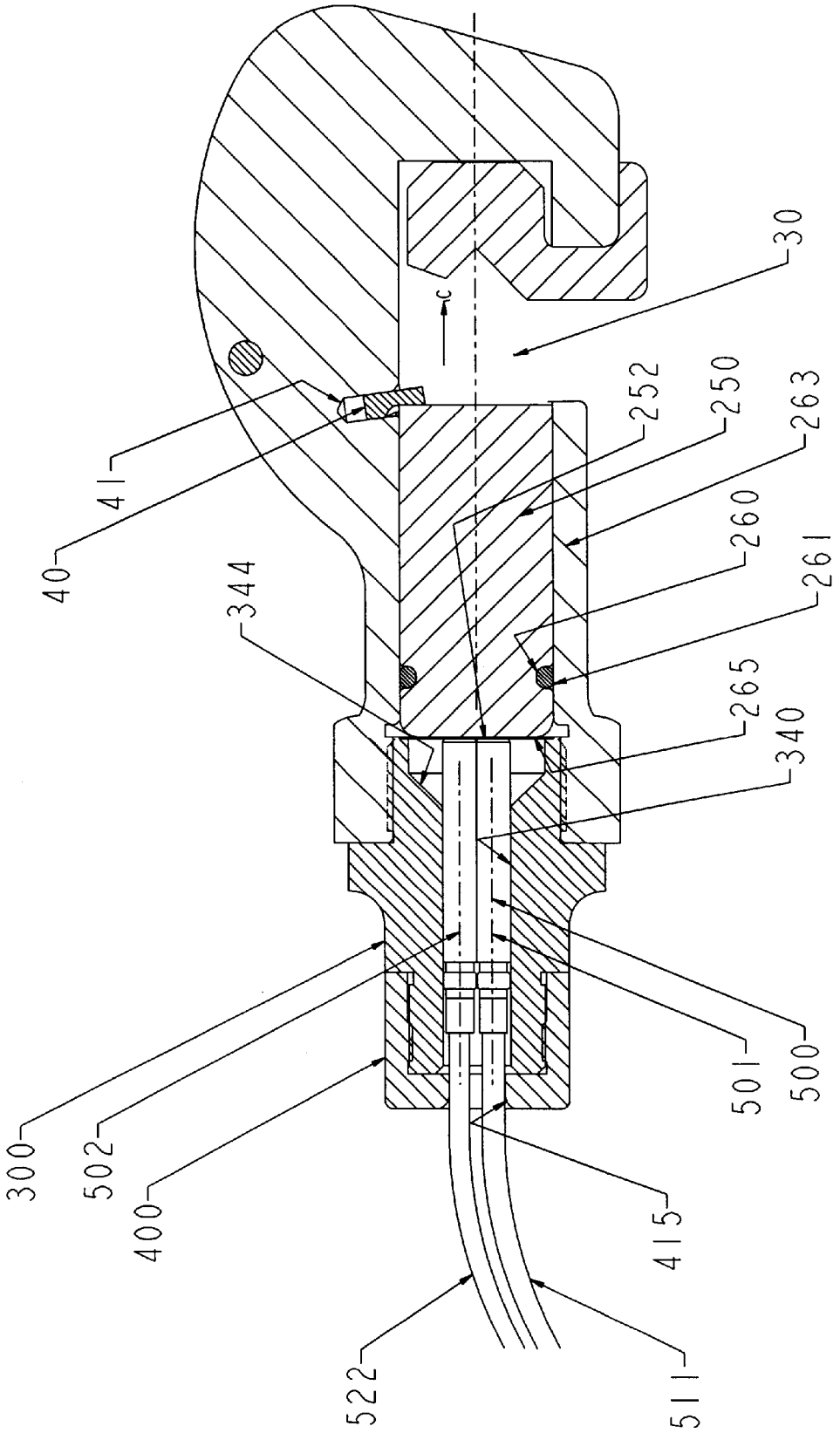
30
c
41
40
344
252
250
263
260
261
265
340
300
502
400
522
415
511
501
500

FIGURE 3

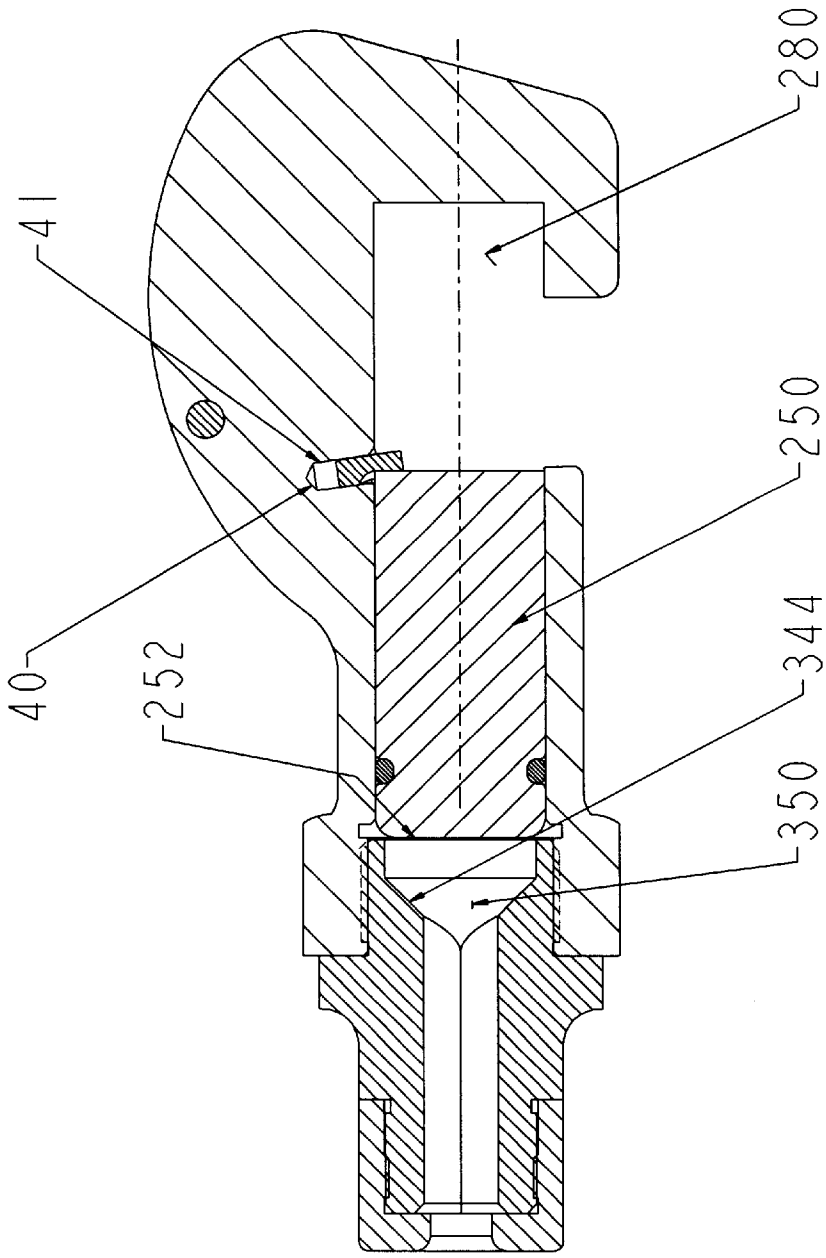

FIGURE 4

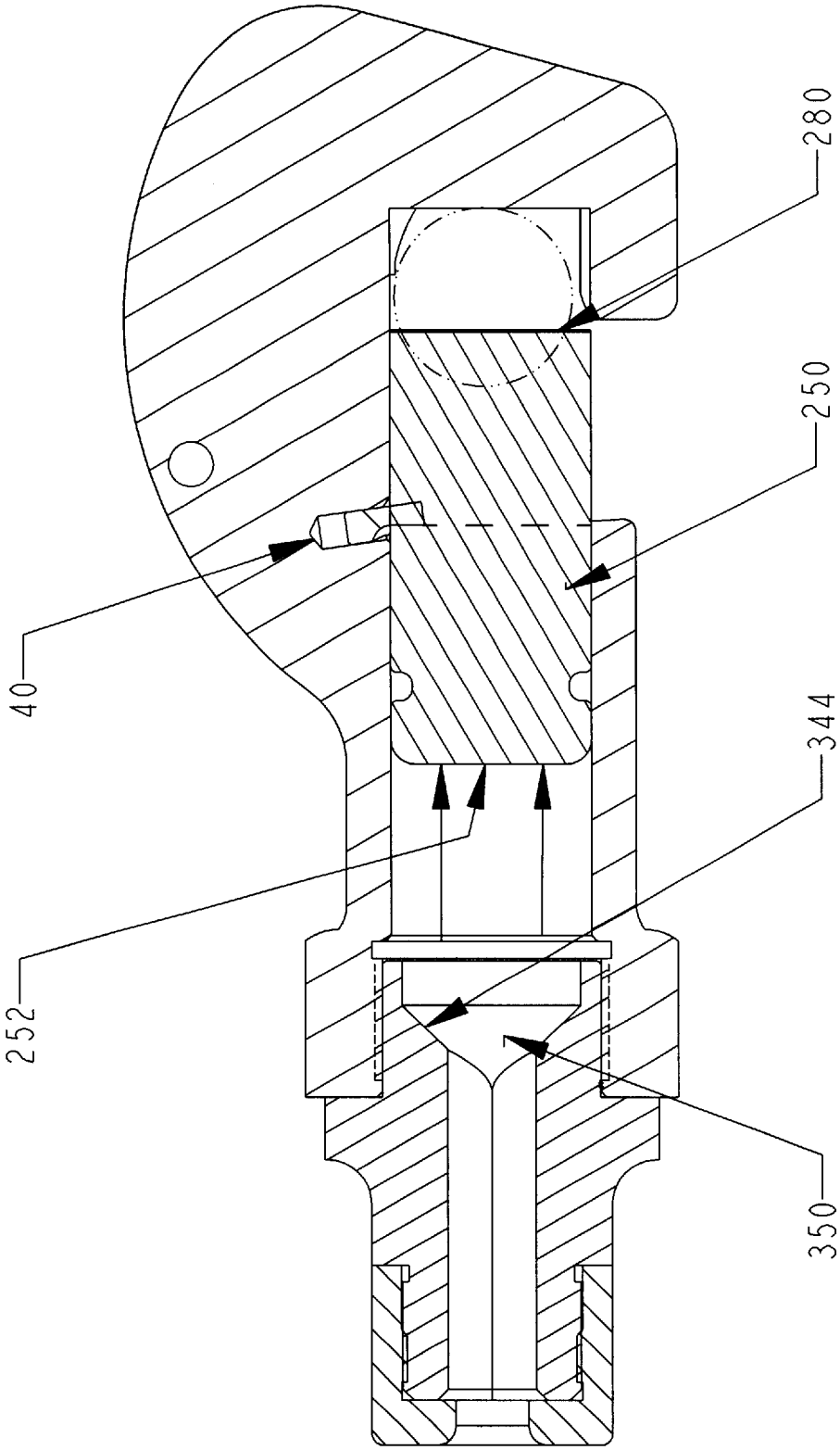

FIGURE 5

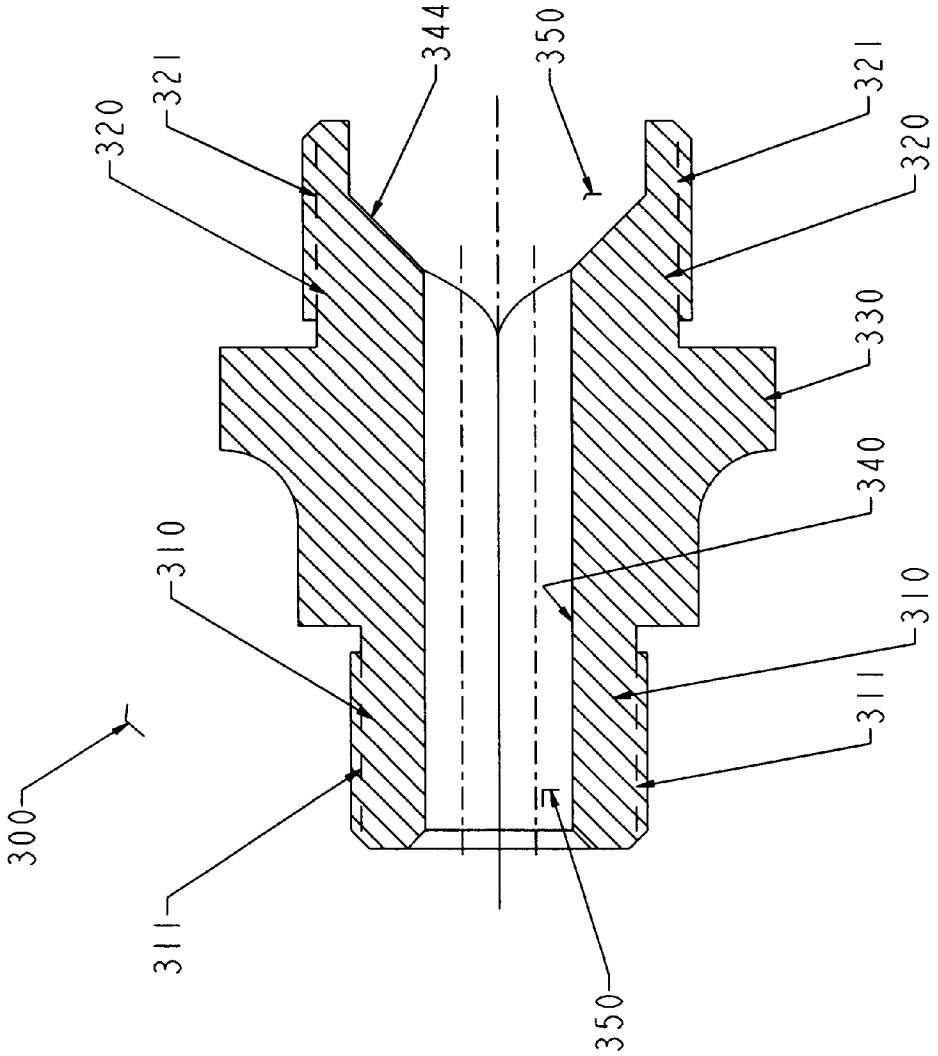

FIGURE 6A

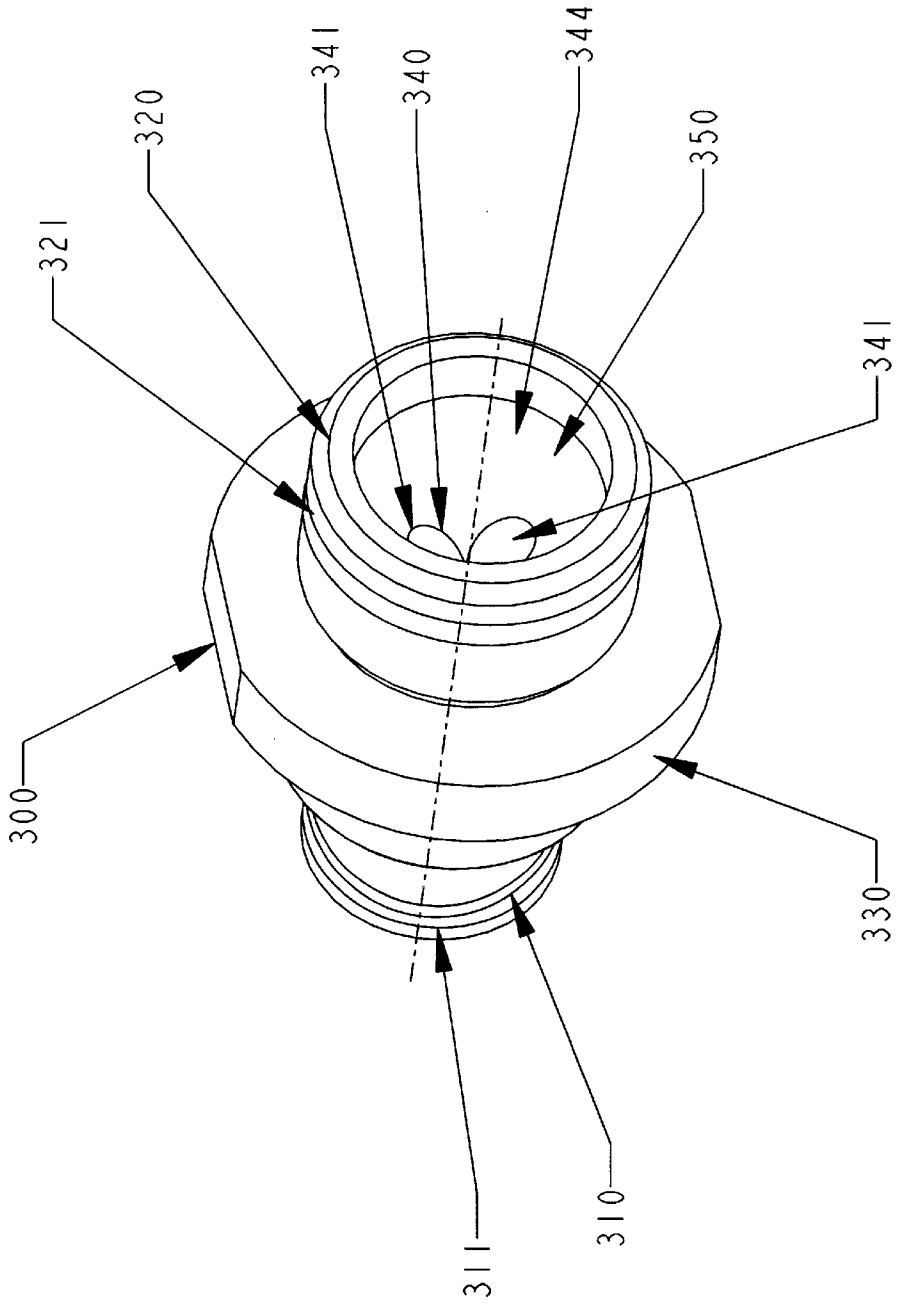

FIGURE 6B

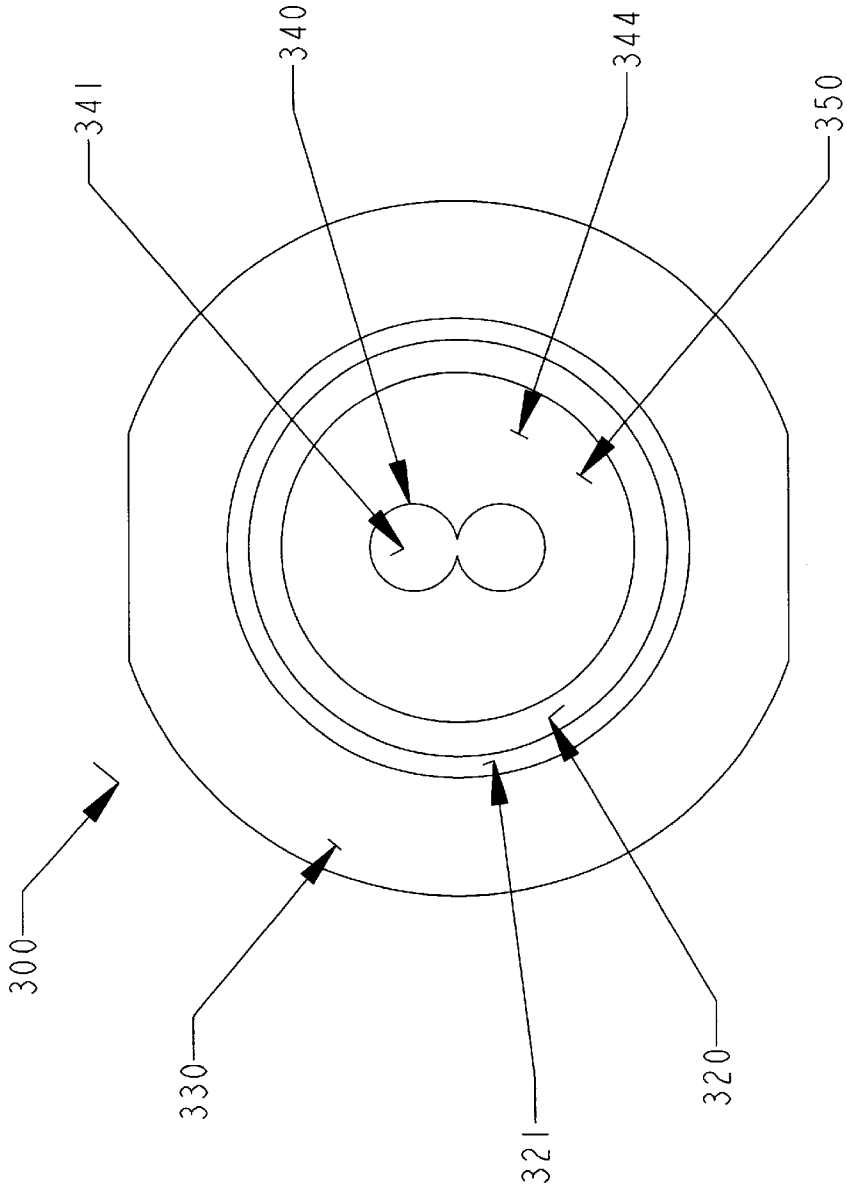

FIGURE 6C

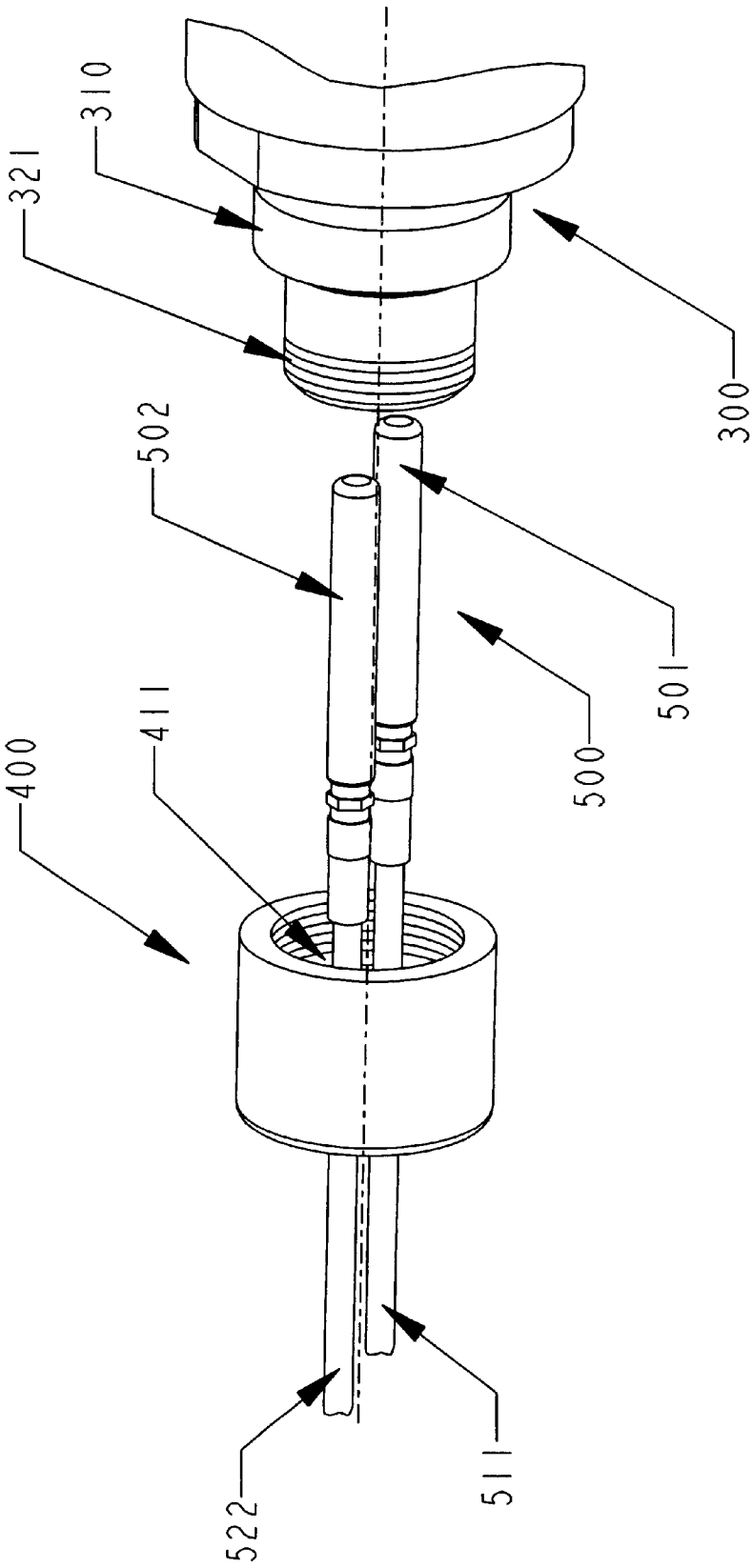

FIGURE 7A

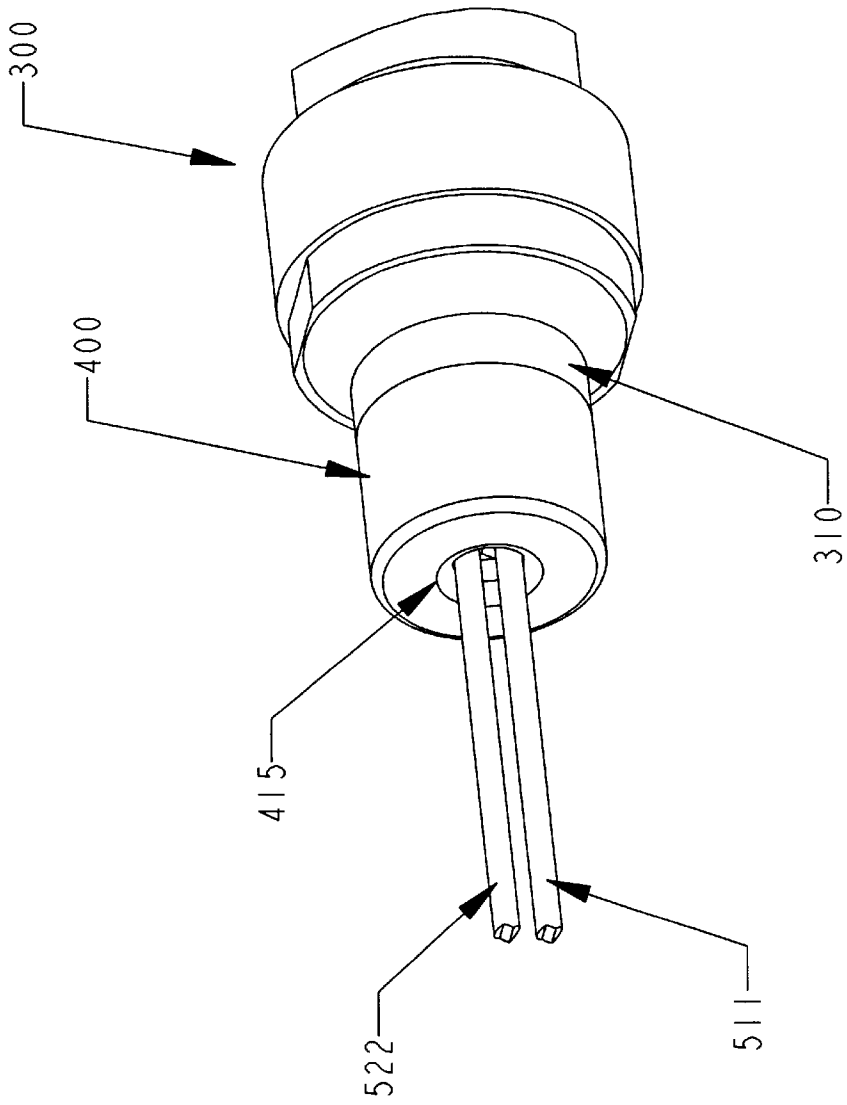

FIGURE 7B

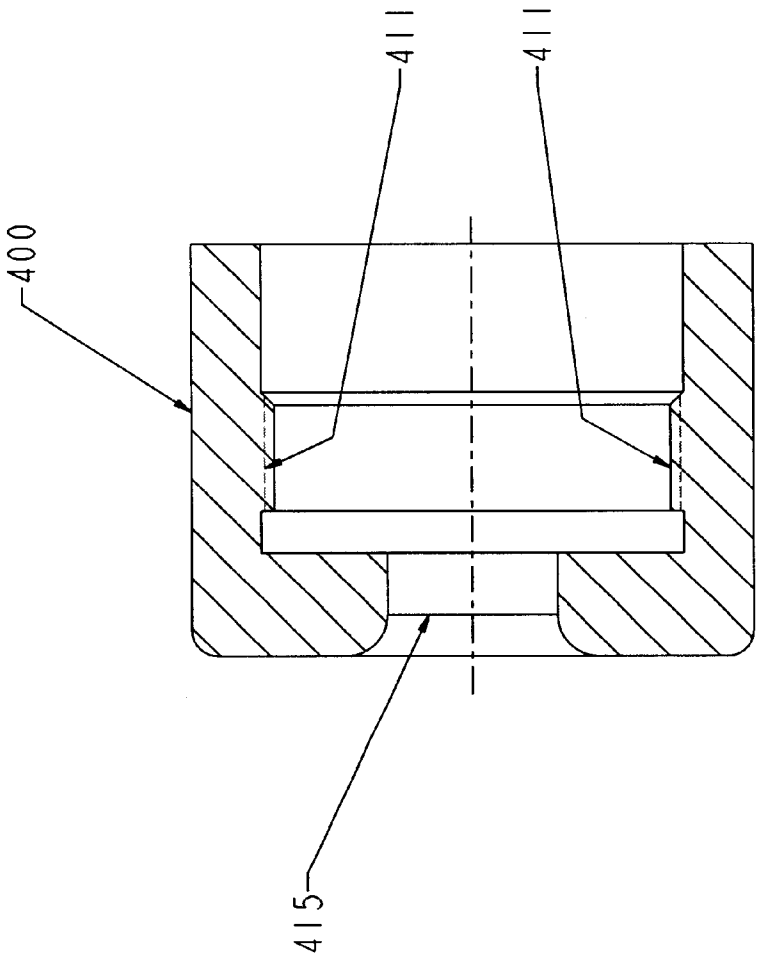

FIGURE 8

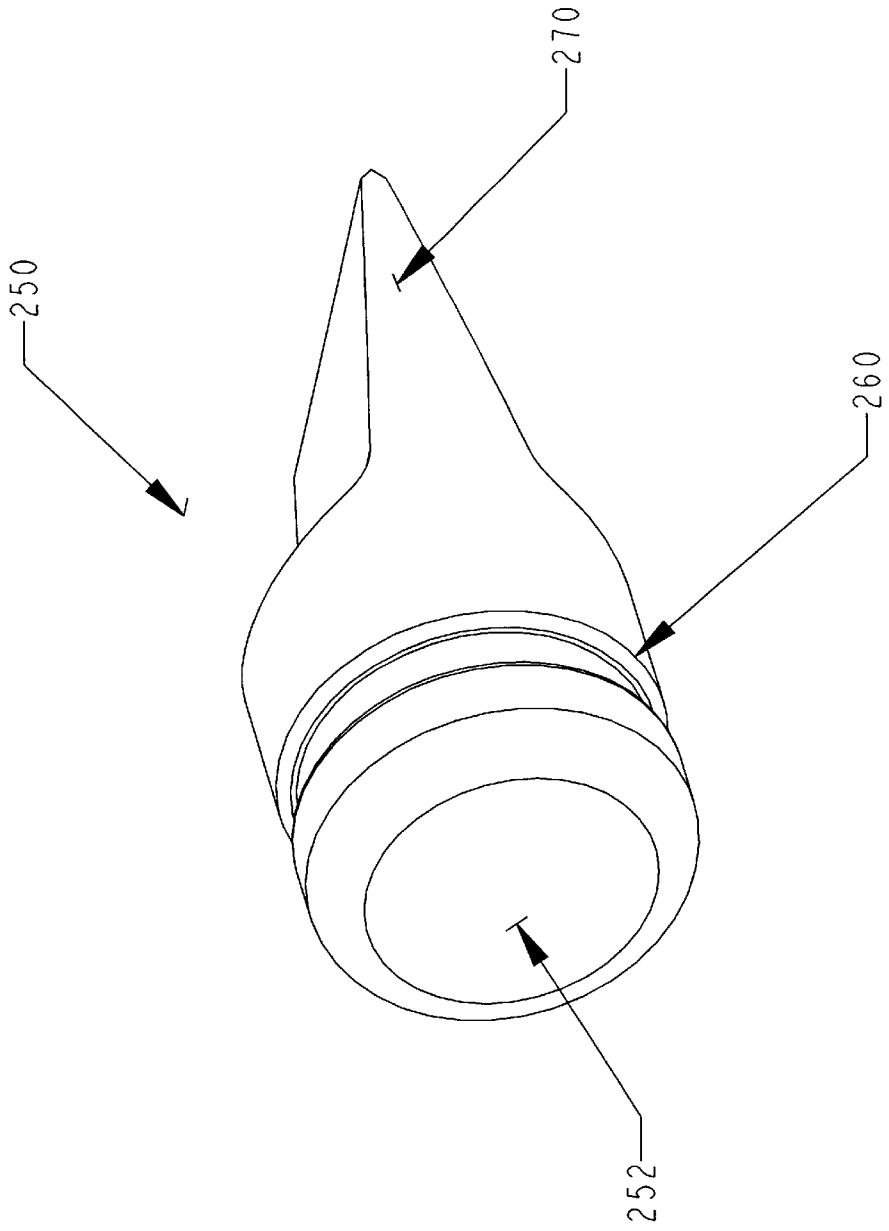

FIGURE 9

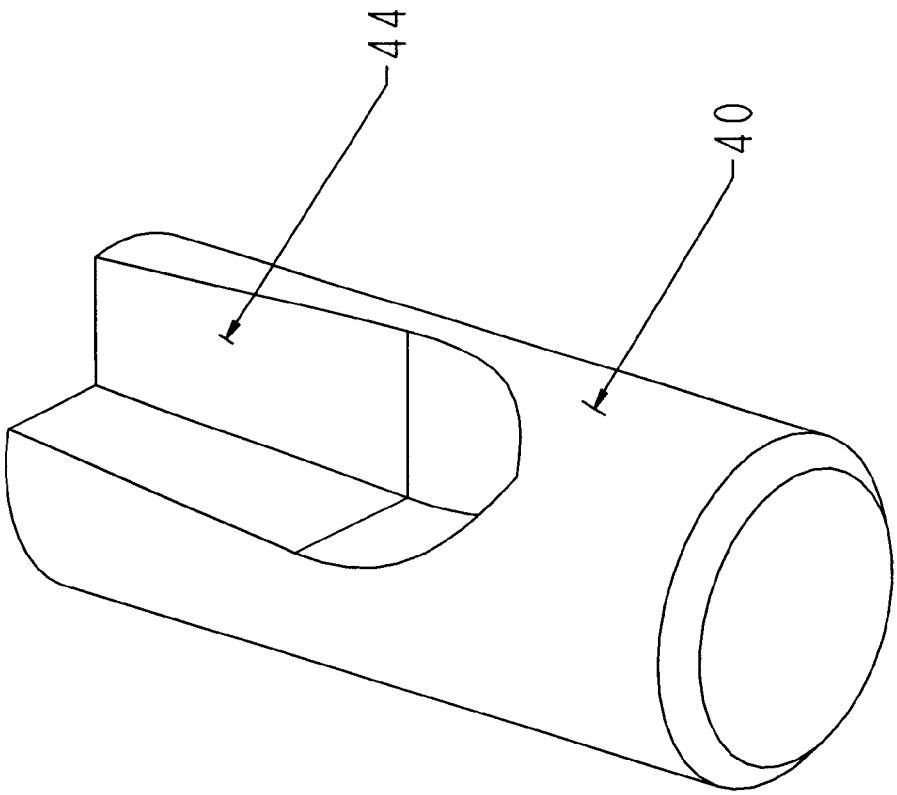

FIGURE 10

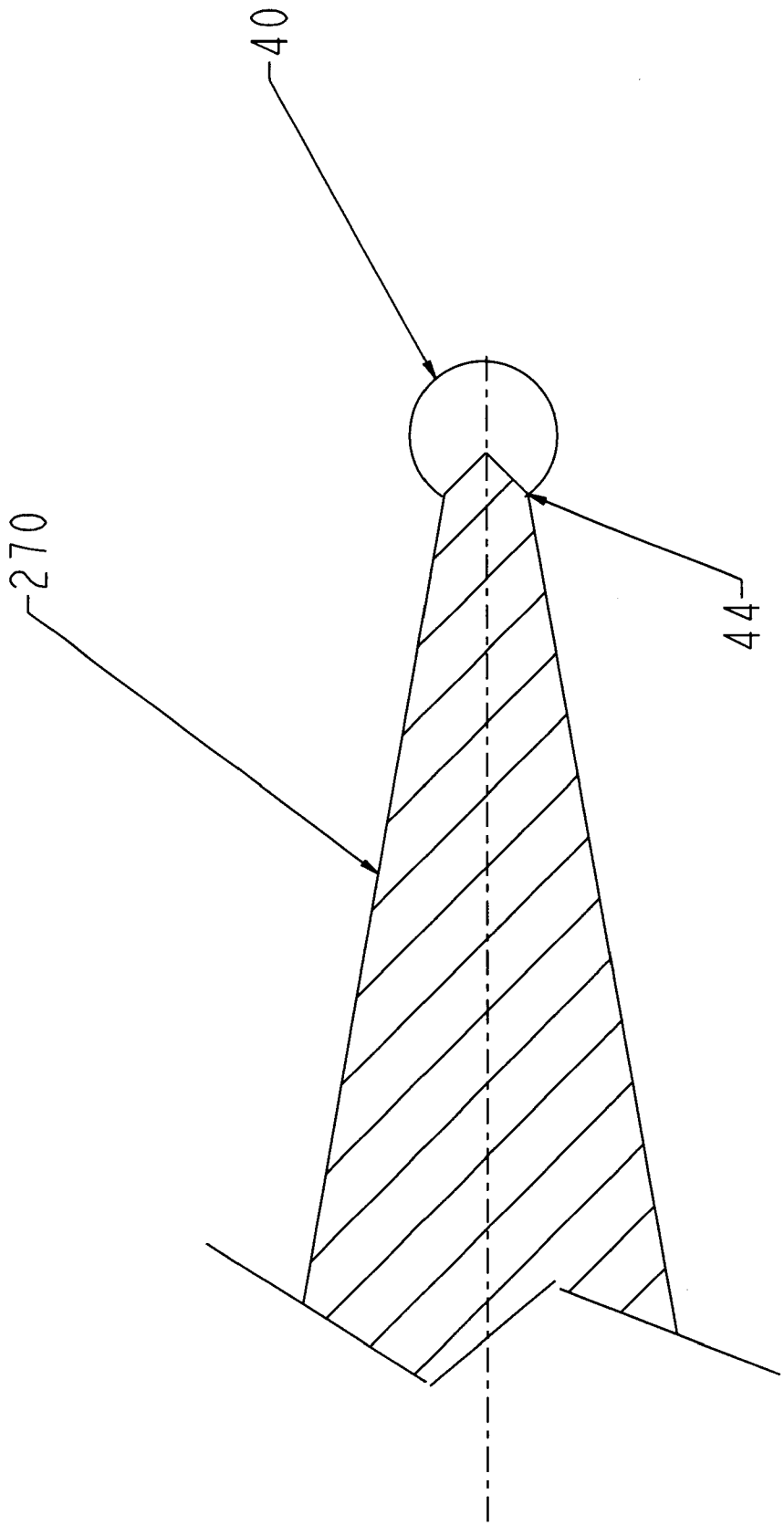

FIGURE 11

CABLE CUTTER

BACKGROUND OF THE INVENTION

1. Field of the invention

The present invention relates generally to a cable cutter for cutting a cable, and more particularly to a cable cutter driven by an explosive event.

2. Description of the Related Art

Various types of the cutters have been used for cutting a cable. Typically, a blade and a cutter jaw or two scissors controlled by an actuator in a powered cutting device pivot or reciprocally move to cut a cable disposed between the blade and the cutter jaw or the two scissors. The cutting device, however, becomes more complicated and more difficult to be assembled since the power cutting device needs to cut the cable more efficiently.

Efforts to effectively cut a cable have spawned various types of cable cutters. For example, U.S. Pat. No. 5,598,635 for a Hydraulic Puncher issued to Saito and U.S. Pat. No. 5,416,975 for a Hydraulic Puncher and U.S. Pat. No. 5,233,749 for a Hydraulic Actuator issued to Saito et al. disclose a hydraulic puncher including a puncher holder, a C-shaped frame integrally connected to the punch holder, a die holder removably connected to one end of the C-shaped frame. U.S. Pat. No. 5,341,572 for a Hydraulic Punching Tool issued to Michelson discloses a hydraulic punching tool alternatively producing a relatively strong power stroke and a relatively weak reset stroke. U.S. Patent No. 5,272,811 for a Hydraulically Controlled SelfNavy Contained Multi-functional Tool Such As Shears/Separator issued to Armand discloses a hydraulically controlled self-contained multi-functional hand tool including a hydraulic ram portion with a rod. I have noticed that the embodiments described by these references fail to show an inert assembly detachably attached to the main body of the cable cutter.

U.S. Pat. No. 5,224,268 for an Apparatus For a Shearing a Material Mass issued to Pemberton discloses an apparatus for shearing a material mass having a pair of movable shears, an outrigger secured to the one of the shears and extended across the path of the other one of the movable shears and supporting the material mass during severing and transferring torque from one shear to urge it toward the other shear. U.S. Pat. No. 5,172,479 for a Pneumatic Scissors issued to Keeton discloses a pneumatic scissors including a stationary substantially planar blade, and a movable blade having a thickness greater than that of the stationary planar blade, and a pneumatic actuator. U.S. Pat. No. 4,521,963 for a Hydraulic Cable And Rod Cutting And Crimping Device issued to Lind et al. discloses a hydraulic cable and rod cutting and crimping device including dual manually held handles centrally receiving and exhausting the operating pressurized hydraulic fluid and a safety trigger assembly, and a piston assembly. U.S. Pat. No. 4,136,445 for a Pneumatically Operated Cable-Slitting Tool issued to Grubb discloses a pneumatically operated cable-slitting tool having a toggle trigger for actuating a control rod controlling a pair of pneumatic check valves. Also, I have noticed that the embodiments described by these references do not show an inert assembly detachably attached to the main body of the cable cutter.

U.S. Pat. No. 5,722,170 for a Cartridge Actuated Cable Cutter issued to Smith discloses an explosive cartridge actuated cable cutter device shearing power transmission line or underground cable and including a bore accommodating a piston, a radially extending impact shoulder attached to a piston, a circumferential step formed on the bore and forming a reaction shoulder in the bore, a shock attenuator sleeve inserted into the circumferential step and between the bore and the piston. The piston rod compressively engages shock attenuator sleeve and compress the shock attenuator sleeve against reaction shoulder, thereby dissipating the kinetic energy of the piston member at the conclusion of the cutting stroke.

SUMMARY OF THE INVENTION

It is an object of the present invention to provide an improved cutting device for cutting a cable.

It is another object to provide a cutting device able to be easily assembled.

It is yet another object to provide a cutting device to be assembled and loaded at the time of use.

It is yet another object to provide a cutting device driven by an explosive event which powers a cutting blade to cut a cable.

These and other objects may be achieved by providing a cable cutter for cutting a cable by using an explosive event supplied by a detonator with a shock tube initiator. The cable cutter comprises a main body and an initiator assembly connected to the main body. A cutter disposed in the main body to slidably move within a bore formed on the main body. The initiator assembly is coupled to the main body and includes a coupler removeably attached to the main body, a passageway formed within the coupler, a cap, having a hole formed within the cap, removeably attached to the coupler, and at least one detonator inserted into the hole in the cap and through the passageway wherein the detonator is proximate to the base of the cutter. When the detonator is initiated, the explosive event resulting from the detonator pushes the cutter forward to cut the cable or other workpiece. The initiator assembly can be detachably attached to the main body of the cable cutter and loaded at the time of use. A **45** degree right-angle cone is provided within the coupler to direct the output energy toward the base of the cutter body causing a more efficient cutting operation of the cutter blade.

BRIEF DESCRIPTION OF THE DRAWINGS

A more complete appreciation of the invention, and many of the attendant advantages, thereof, will be readily apparent as the same becomes better understood by reference to the following detailed description when considered in conjunction with the accompanying drawings in which like reference symbols indicate the same or similar components, wherein:

FIG. **1** is a perspective view showing a cable cutter according to the principle of the present invention;

FIG. **2** is an exploded view of the cable cutter;

FIG. **3** is a cross-sectional view showing an embodiment of the cable cutter of FIG. **1**;

FIG. **4** is a cross-sectional view showing an embodiment of the cable cutter of FIG. **1**;

FIG. **5** is a cross-sectional view showing the cable cutter cutting a cable;

FIG. **6**A is a longitudinal cross-sectional view of a coupler of the cable cutter;

FIGS. **6**B and **6**C are a perspective view and a front view of the coupler;

FIG. **7**A is an exploded view of the cap and the coupler of the cable cutter of FIG. **1**;

FIGS. **7**B and **8** are a perspective view and a cross-sectional view of the cap;

FIG. **9** is a perspective view of a cutter;

FIG. **10** is a perspective side view of a stopper;

FIG. **11** is a partial cross-sectional view of FIG. **3**.

DETAILED DESCRIPTION OF THE INVENTION

Returning now to FIG. **1**, a cable cutter includes a main body **200** and an initiator assembly **50** detachably attached to the main body **200**. The initiator assembly includes a coupler **300** having one end coupled to one end of main body **200** and a cap **400** coupled to the other end of coupler **300**. The main body **200** defines a supporter **203**, a jaw **202** perpendicular to supporter **203**, and a jaw extension **201** parallel to supporter **203**. A block receptacle **280** is formed between supporter **203** and jaw extension **201**, and a block body **12** of a block **10** is disposed within block receptacle **280**. A block groove **11** is formed on block body **12** of block **10**. A work piece is placed on the block groove **11** and disposed in a work piece receptacle **30** formed between main body **200** and block groove **11** of block **10**. A plurality of pins **23** protrude from both sides of main body **200** and support a coil portion **21** of a spring **20**. A block supporter **24** extended from spring **20** is disposed to push the block **10** against jaw **202**. The spring **20** holds block **10** in place until the spring **20** is released, thereby allowing block **10** to be removed from the workpiece receptacle **30**. If block **10** is not used in main body **200**, the work piece can be disposed in block receptacle **280** to be cut.

FIG. **2** is an exploded view of the cable cutter. A cutter container **205** is formed on the end of the main body **200** opposite the jaw **202**. A connector **210** is formed on one end of the cutter container **205**, and a cutter opening **220** is formed inside of cutter container **205**. A circular end **230** of the cutter opening **220** faces the workpiece receptacle **30**. A coupler **300** is coupled to connector **210** of main body **200** while cutter **250** is movably inserted into cutter opening **220** of main body **200**. Cutter **250** includes a blade **270**, a cutting edge **271** formed on one end of cutter **250**, cutter body **251**, an o-ring groove **260** formed on a circumferential surface of cutter body **251**, and a cutter base **252** formed on the other end of cutter **250**. A coupler body **330** of coupler **300** has a head coupler **320** formed on one end of coupler body **330** of coupler **300** and a cap coupler **310** formed on the other end of coupler body **330** of coupler **300**. A thread **321** formed on outer surface of head coupler **320** is coupled to a thread formed on an inner surface of connector **210**, and head coupler **320** is disposed adjacent to the cutter base **252** of cutter **250** when coupler **300** is securely coupled to main body **200**. A thread **311** formed on an outer surface of cap coupler **310** is coupled to a thread **411** formed on an inner surface of coupler hole **410** of cap **400**.

FIG. **3** shows a cross-sectional view of cable cutter. A longitudinal bore **263** is formed inside of cutter container **205**, and an o-ring **261** is inserted between an inner surface of longitudinal bore **263** and o-ring groove **260** of cutter **250** to seal cutter **250** within longitudinal bore **263**. Cutter **250** is disposed within longitudinal bore **263** to move in a direction of an arrow C through cutter opening **220**. When cutter **250** is in a first position as shown in FIG. **3**, the workpiece is placed in workpiece receptacle **30**. The cutter **250** is held in the first position by a stopper **40** inserted into a stopper hole **41** formed on an inner surface of longitudinal bore **263**. The stopper **40** protrudes from the inner surface of longitudinal bore **263** and contacts the cutting edge **271** (not depicted) of cutter **250**. In one embodiment of the invention, the stopper **40** comprises a pin. Stopper **40** is cut off when the cutter **250** initially moves in the direction of the arrow C, and then the cutter can continue to move in the direction of the arrow C.

Again referring to FIG. **3**, a passageway **340** is formed inside of coupler **300**, and a cone shaped-surface **344** extended from passageway **340** is formed inside of head coupler **320** of coupler **300**. A detonator assembly **500**, depicted in this embodiment of the invention having a plurality of detonators **501**, **502**, is fixedly inserted into passageway **340** and cone space **350** formed inside of cone shaped-surface **344**, and a plurality of initiators **511**, **522** extend through the hole **415** formed on the cap **400**. Each end of detonators **501**, **502** face the cutter base **252** of cutter **250** through a detonator guide **265** disposed between cone shaped-surface **344** and cutter base **252**. When the initiators **511**,**522** are actuated a shock wave initiates the main explosive within the detonators **501**, **502**. In one embodiment of the invention, the detonator assembly **500** comprises a dual non-electric M7 detonator. In another embodiment, the detonator assembly **500** comprises an electrically actuated detonator. In a preferred embodiment of the invention, the main charge of the detonators **501**, **502** comprises RDX (Cyclotrimethylenetrinitramine).

When the main charge of the detonators **501**, **502** are initiated, the output from the resulting explosion is reflected by the cone space **350** to the detonation guide **265** to cutter base **252**. The explosive event acts on cutter base **252** to move the cutter **250** in the direction of the arrow C.

FIG. **4** shows cable cutter in the first position (before initiation) and FIG. **5** shows cutter **100** in the second position, cutter **250** cutting the workpiece such as a cable. The cable (not shown) is located in block receptacle **280**. During movement in the direction of the arrow C, cutter **250** cuts the cable. A protruded portion of stopper **40** is cut off when cutter **250** starts to move toward the cable. Cone space **350** is provided within coupler **300** and between cone shaped-surface **344** of coupler **300** and cutter base **252** of cutter **250**.

FIGS. **6**A through **6**C show coupler **300** in detail. Coupler **300** is formed in a single body and includes one end having head coupler **320** coupled to main body **200** and the other end having cap coupler **310** coupled to cap **400** (not depicted). Passageway **340** includes a plurality of detonator receptacles **341**, and cone-shaped surface **344** is extended from detonator receptacles **341** to a cylindrical inner surface of head coupler **320** of coupler **300**. The cone, shaped surface **344** is preferably at approximately a 45 degree angle from passageway **340**.

FIGS. **7**A, **7**B, and **8** show cap **400** coupled to coupler **300**. Detonator assemblies **500** are inserted into cap **400** through blasting hole **415** and into coupler **300**. And then, coupler **300** is coupled into main body **200** (not depicted). The cap **400**, detonator assembly **500**, and coupler **300** are easily dissembled from and assembled into main body **200**.

Cutter **250** is shown in FIG. **9**, and stopper **40** is shown in FIGS. **10**A and **10**B. A stopper groove **44** is formed on an upper portion of stopper **40** to accommodate the insertion of the blade **270**. As shown in FIG. **11**, blade **270** of cutter **250** is inserted into stopper groove **44** of stopper **40**, and the blade is stopped by stopper **40**. When the cutter **250** starts to move by the force of the shock waves, the blade **270** cuts off the upper portion of stopper **40** and moves toward the workpiece.

While this invention has been described in connection with what is presently considered to be the most practical and the disclosed embodiments, it is to be understood that

the invention is not limited to the disclosed embodiments, but, on the contrary, is intended to cover various modifications and equivalent arrangements included within the sprit and the scope of the claims.

What is claimed is:

1. A cutting device, comprising:

a main body, with first and second ends, having a workpiece holder formed on said first end of said main body;

a bore having enter and exit ends formed inside of said main body wherein said first end faces said workpiece holder;

a cutter having a blade and a base disposed within said bore, said blade proximate to said exit end and said base proximate to said enter end;

a coupler having a passageway formed inside of said coupler and having front and back ends, said front end of said coupler connected to said second end of said main body wherein said bore and said passageway align;

forward and rear portions of said passageway, said forward portion proximate to said front end of said coupler having a diameter wherein said diameter enlarges in approximately a conical shape;

a cap coupled to said back end of said coupler, having a hole formed on said cap;

an explosive material within said passageway; and,

means to detonate said explosive material inserted through said hole of said cap wherein detonation creates a shock wave directed by said conical shape to push said base of said cutter so that said blade of said cutter passes through said workpiece holder.

2. The cutting device of claim **1**, wherein said conical shape comprises an angle of approximately 45 degrees from the rear portion of said passageway.

3. The cutting device of claim **2**, wherein said explosive material is selected from the group including RDX (Cyclotrimethylenetrinitramine) or HMX (Cyclotetramethylenetetranitramine).

4. The cutting device of claim **3**, wherein said explosive material and said detonating means comprises a non-electric M7 detonator.

5. The cutting device of claim **4**, wherein said explosive material and said detonating means comprises dual non-electric M7 detonators.

6. The cutting device of claim **5**, further comprising a first thread formed on said front end of said coupler and a second thread formed on said second end of said main body wherein said first thread couples removeably to said second thread.

7. The cutting device of claim **6**, further comprising a back thread formed on said back end of said coupler and a front thread formed on said cap wherein said back thread couples removeably to said front thread.

8. The cutting device of claim **7**, wherein said cutter further comprises an o-ring groove formed proximate to the base of said cutter and an o-ring placed within said o-ring groove to seal said cutter within said bore.

9. The cutting device of claim **8**, further comprising a stopper, partially extended through said bore wherein said stopper holds said cutter within said bore until said shock wave pushes said cutter.

10. The cutting device of claim **9**, wherein said stopper comprises a pin.

11. The cutting device of claim **10**, further comprising a safety assembly having an armed and a disarmed position wherein said cutting device cannot operate unless said safety assembly comprises said disarmed position.

12. The cutting device of claim **11**, wherein said safety assembly comprises:

a hole formed in said main body;

at least one pin having ends inserted through said hole wherein said ends extend beyond said main body;

a spring having a coil wherein said coil moveably connects to said ends and wherein said spring comprises a safety position and a release position;

a safety block, connected to said spring, and removeably inserted within said workpiece holder, wherein said spring holds said safety block within said workpiece holder when in said safety position and releases said safety block when said spring comprises a release position.

* * * * *