US005821447A

United States Patent [19]

Reams et al.

[11] **Patent Number: 5,821,447**

[45] **Date of Patent: Oct. 13, 1998**

[54] **SAFETY AND ARMING DEVICE**

[75] Inventors: **William H. Reams**, Keedysville; **Douglas M. Hinely**, Rockville, both of Md.; **Brian L. Will**, Fredericksburg, Va.; **Louis J. Montesi**, Laurel; **Gerald R. Laib**, Olney, both of Md.

[73] Assignee: **The United States of America as represented by the Secretary of the Navy**, Washington, D.C.

[21] Appl. No.: **520,976**

[22] Filed: **Aug. 24, 1995**

[51] **Int. Cl.**[6] **F42B 22/44**

[52] **U.S. Cl.** **102/223**; 102/229; 102/420; 102/406; 89/1.55

[58] **Field of Search** 102/223, 224, 102/228, 229, 254, 255, 256, 257, 390, 391, 392, 420, 419, 416, 411, 406, 263; 89/1.55

[56] **References Cited**

U.S. PATENT DOCUMENTS

H492	7/1988	Kong et al.	102/229
3,165,059	1/1965	Saunders	102/225
3,710,722	1/1973	Demas et al.	102/226
3,842,743	10/1974	Zittle	102/229
3,994,231	11/1976	Rudeen et al.	102/228
4,341,159	7/1982	Edminster	102/228
4,369,709	1/1983	Backstein et al.	102/420
4,380,197	4/1983	Eaton	102/228
5,005,482	4/1991	Reams	102/420
5,016,532	5/1991	Edminster	102/254

Primary Examiner—Charles T. Jordan
Assistant Examiner—Christopher K. Montgomery
Attorney, Agent, or Firm—John Forrest; Jacob Shuster

[57] **ABSTRACT**

A safety and arming device interconnecting a bomb with a target detector insures safe mine laying deployment thereof through a detonation explosive train that is armed in delayed response to payout of a lanyard under enablement control exercised by a hydrodynamic piston in response to water impact during such deployment.

12 Claims, 3 Drawing Sheets

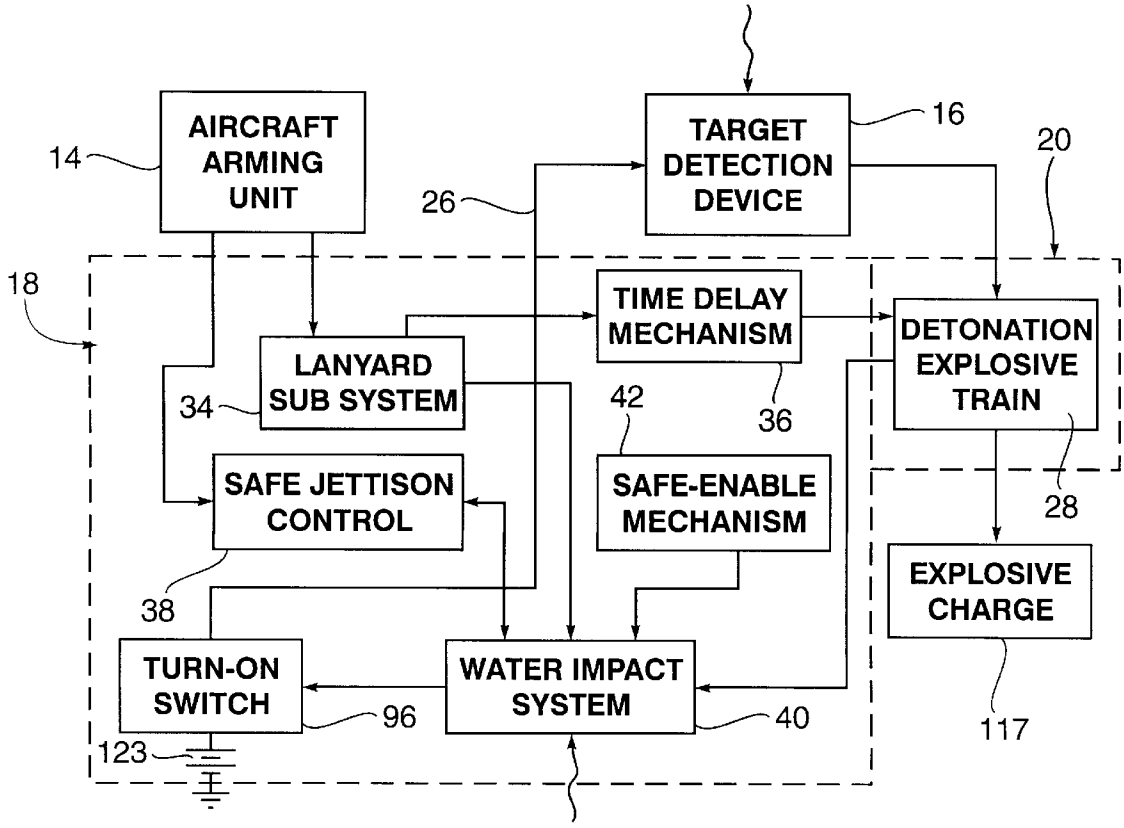

FIG. 1

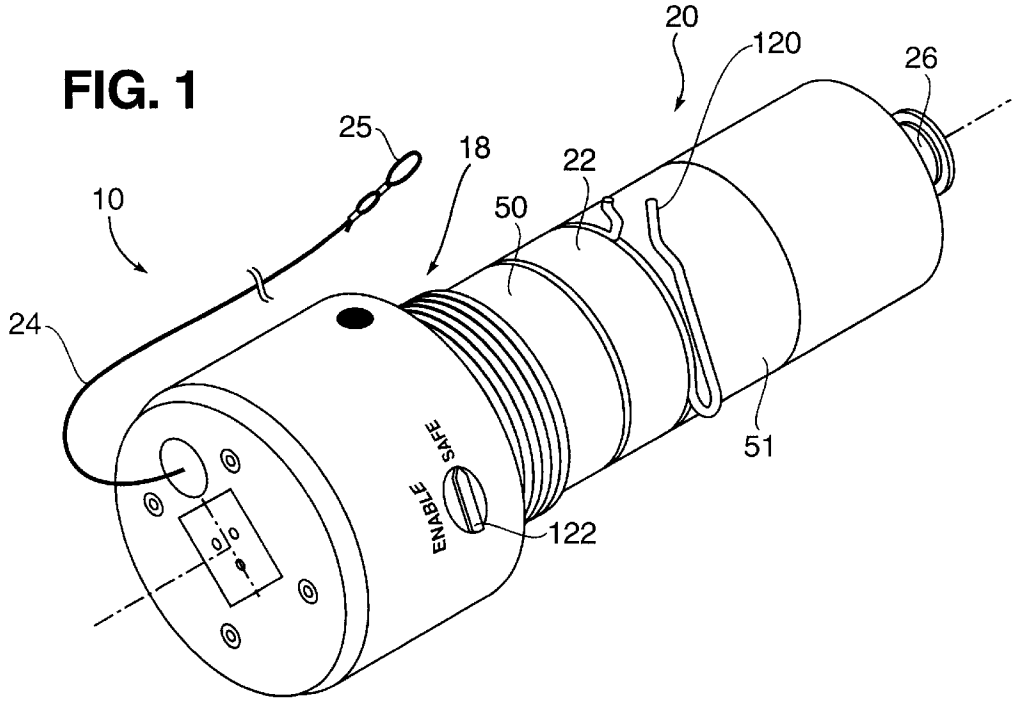
20
120
26
25
18
22
10
50
24
51
SAFE
ENABLE
122

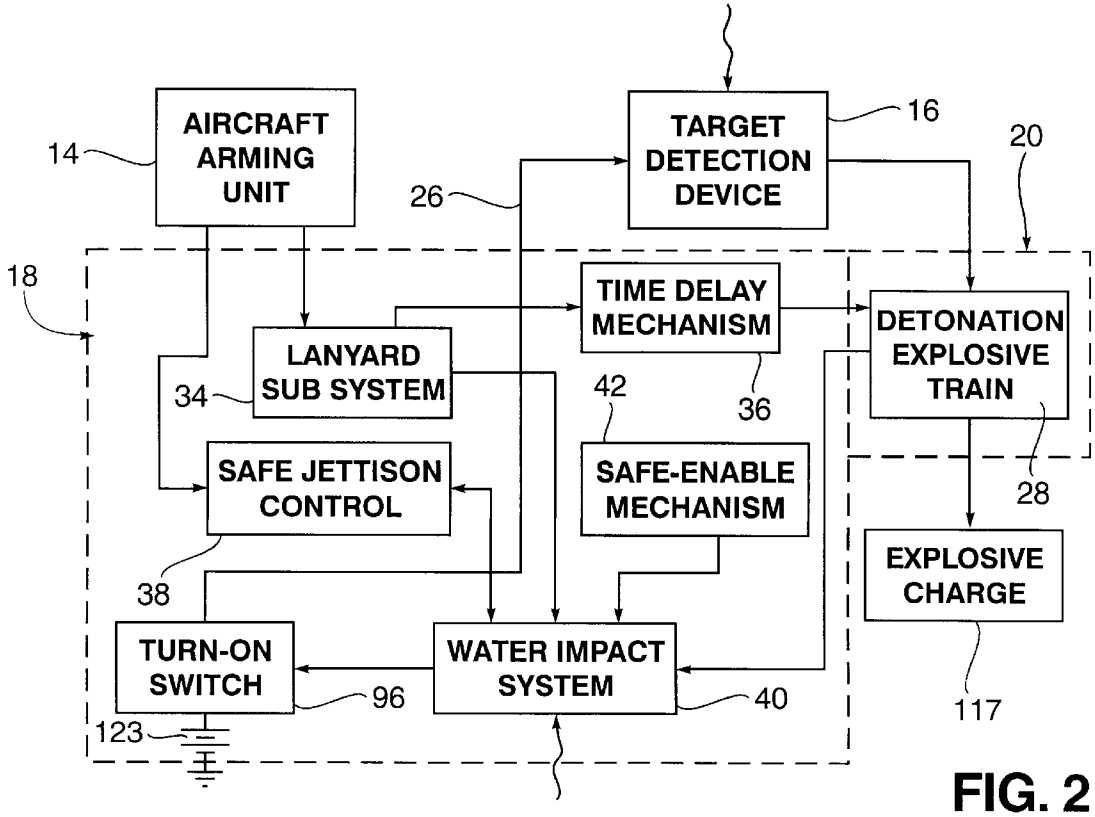
AIRCRAFT ARMING UNIT
14
TARGET DETECTION DEVICE
16
20
26
18
TIME DELAY MECHANISM
DETONATION EXPLOSIVE TRAIN
LANYARD SUB SYSTEM
34
42
36
SAFE JETTISON CONTROL
SAFE-ENABLE MECHANISM
28
EXPLOSIVE CHARGE
38
TURN-ON SWITCH
WATER IMPACT SYSTEM
96
40
117
123

FIG. 2

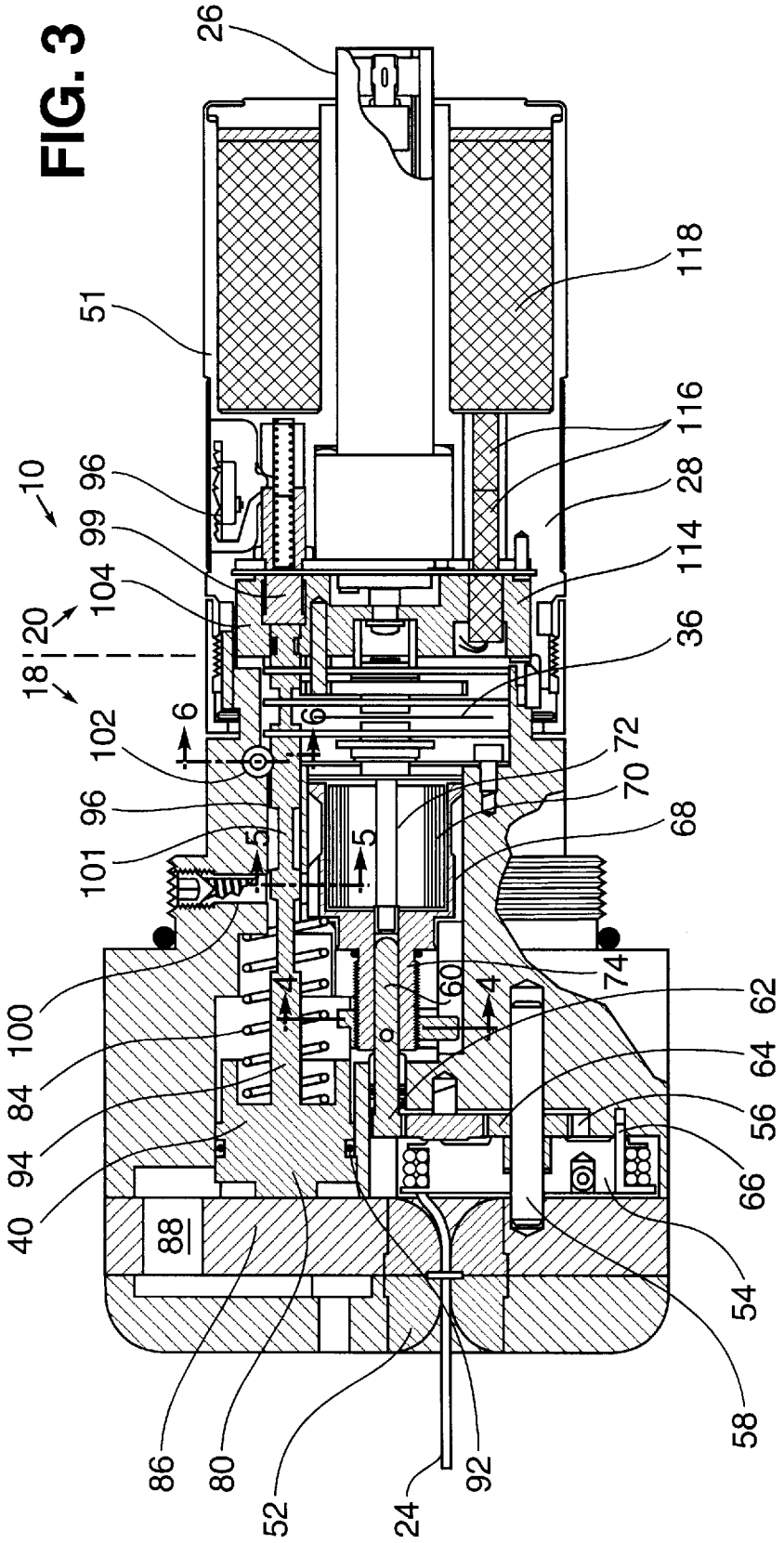
26
51
118
116
28
114
36
10
96
99
104
20
18
102
6
6
72
70
68
96
101
5
5
100
84
94
40
88
4
4
60
74
62
64
56
66
54
58
86
80
52
24
92

FIG. 3

FIG. 4

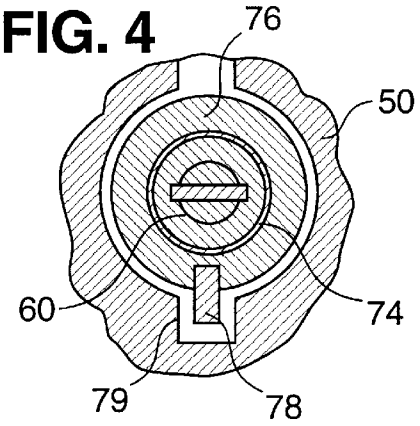

FIG. 5

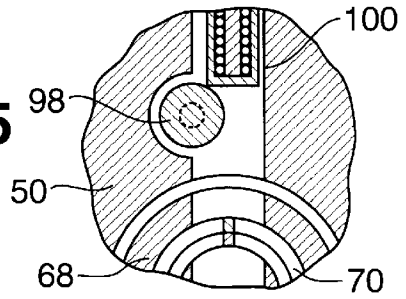

FIG. 6

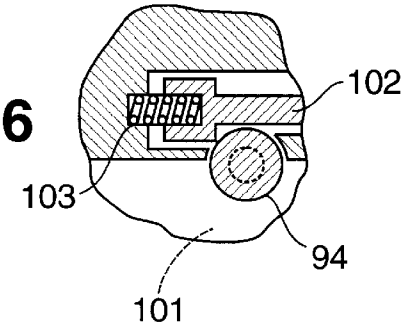

FIG. 7

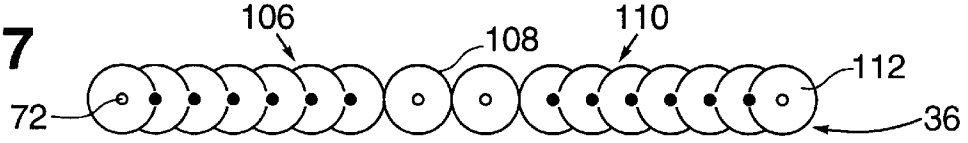

SAFETY AND ARMING DEVICE

BACKGROUND OF THE INVENTION

The present invention relates generally to the fail-safe arming of explosive weapons, and more particularly to the arming of mines or the like deployed into water from an aircraft.

The provision of safety and arming devices for aircraft delivered explosive weapons, is already generally known in the art. Heretofore, such safety and arming devices were operated in response to impact so as to restrict aircraft delivery speed and altitude as a safety measure. Also, aircraft launch conditions and deployment requirements imposed by prior arming devices, restricted delivery speed and altitude and imposed water depth requirements on underwater mine laying operations.

It is therefore an important object of the present invention to provide a safety and arming device which improves underwater explosive weapon deployment by aircraft delivery, with respect to safety, reliability and imposition of operational limits.

SUMMARY OF THE INVENTION

In accordance with the present invention, a safety and arming device is installed in an aircraft delivery envelope, such as the casing for a bomb and target detector. A lanyard pays out from a winding spool within the safety and arming device to store energy in a clock spring during deployment. Water impact is detected through a hydrodynamic piston during deployment so as to avoid arming in response to dry land impact. The water and dry land environments involved in use of the safety and arming device accounts for a reduction in altitude and an decrease in flight speed from limits heretofore imposed on arming operations. Explosive safety and reliability is also improved during arming operations by use of a detonator that is both electrically shorted and held in out-of-line relation to an explosive train by a time delay driven rotor until fail-safe completion of an arming cycle is achieved.

BRIEF DESCRIPTION OF DRAWING FIGURES

A more complete appreciation of the invention and many of its attendant advantages will be readily appreciated as the same becomes better understood by reference to the following detailed description when considered in connection with the accompanying drawing wherein:

FIG. **1** is a perspective view of a safety and arming device constructed in accordance with one embodiment of the invention;

FIG. **2** is a block diagram schematically illustrating the safety and arming device in functional relation to associated aircraft delivery components;

FIG. **3** is a side section view of the safety arming device shown in FIG. **1**;

FIGS. **4**, **5** and **6** are partial transverse section views taken substantially through planes indicated by section lines **4**—**4**, **5**—**5** and **6**—**6** in FIG. **3**; and

FIG. **7** is a schematic view of the time delay drive mechanism depicted in FIGS. **2** and **3**.

DETAILED DESCRIPTION OF PREFERRED EMBODIMENT

Referring now to the drawing in detail, FIG. **1** illustrates a safety and arming device, generally referred to by reference numeral **10**, which is to be utilized for improved delivery of naval weapon mines in accordance with one embodiment of the invention. The device **10** is accordingly associated with a launch platform on a high speed, low altitude flying aircraft from which a bomb is deployed as an underwater mine. Such bomb is associated with a aircraft arming unit **14** and a target detection device **16**, as diagrammed in FIG. **2** and generally known in the naval mine laying art. Thus, the device **10** is adapted to be installed in the nose fuse well of the bomb casing as an aircraft delivery envelope, also having a tail fuse well within which the target detection device **16** is installed. The device **10** includes a safety section **18** and an arming section **20** interconnected therewith by means of a joint ring **22** as shown in FIG. **1**. The safety section **18** is physically connected to the aircraft arming unit **14** by a lanyard **24** and swivel **25** of calibrated strength, while a bomb connector **26** projects from the arming section **20**, as also shown in FIG. **1**, for communication with the target detector device **16**. The operational connections between the device **10** and the target detection device **16** are diagrammed in FIG. **2**.

As depicted in FIG. **2**, a detonation explosive train **28** is provided within the arming section **20** of device **10** to establish an explosive path to the bomb, such path being selectively rendered discontinuous when device **10** is in a "safe" condition and the explosive train maintained electrically shorted. The target detection device **16** is also electrically turned on as hereinafter explained. When a target is thereafter sensed by the target detection device **16**, it sends an electrical signal through a bomb fuse cable from and the bomb connector **26** to the explosive train **28** to achieve detonation. The lanyard **24** connected to the aircraft arming unit **14** through swivel **25** extends into the lanyard subsystem **34** of the safety section **18**, from which lanyard movement is transferred by a time delay mechanism **36** to the explosive train **28** under safety payout restrictions imposed by safe jettison controls **38** through which a water impact subsystem **40** is also enabled. Subsystem **40** detects entry of the delivery envelope carrying device **10** into the water to provide an output applied to the safe jettison controls **38** for payout control of the subsystem **34** of device **10** connected to the explosive train **28** through time-delay mechanism **36** for regulating arming. A safe-enable mechanism **42** is connected to subsystem **40** as also diagrammed in FIG. **2**.

The aforementioned "safe" condition of the device **10** is maintained by out-of-line positioning of the detonation explosive train **28** of arming section **20** during storage, handling and transportation of device **10** in its delivery envelope installation. Only after environmental conditions unique to weapon deployment are sensed in the safety section **18** of device **10**, is it switched to the "armed" condition. Such environmental conditions include aircraft launch reflected by deployment of the lanyard **24**, hydrodynamic pressure reflecting water entry sensed by the water impact subsystem **40** as hereinafter described and a time delay imposed by the time delay mechanism **36** for fail-safe operational control. Before the delivery envelope enclosing the device **10** is dropped from an aircraft, the lanyard **24** is held retracted within the safety section **18** under a force of 40 pounds for example, exceeding the pull-out force of the arming unit **14** of the aircraft imposed by its deenergized solenoid (not shown), to prevent initiation of any arming sequence. Such solenoid in the arming unit **14** is energized under selective control of the aircraft pilot to "arm" the device **10** before a mine laying operation is initiated, in which case the lanyard **24** will be pulled from the device **10**

when its delivery envelope is dropped. The arming unit solenoid may remain deenergized if the delivery envelope is dropped without arming thereof, in which case the lanyard **24** is not extracted from device **10** as it falls from the aircraft. Upon ejection of the delivery envelope from the aircraft after arming, it continues to fall a short distance of 30 inches for example, during which the lanyard subsystem **34** stores energy transferred thereto by lanyard payout to enable the water impact subsystem **40** when deployment is subsequently completed. Further payout of the lanyard **24** is then prevented so that it separates from the arming unit **14** under a force of about 150 pounds established by calibration of swivel **25** connecting the lanyard to the arming unit.

During travel of the device **10** through the water in its delivery envelope, the hydrodynamic pressure exerted on the water impact subsystem **40** turns on the target detection device **16** as hereinafter explained while operation of the water impact subsystem **40** continues. Also, the detonation explosive train **28** is unlocked to permit operation thereof after an approximately 90 second time delay imposed by the time delay mechanism **36**, as aforementioned. At the end of such time delay, electrical shorting of detonation is removed, electrical firing circuit connection is made and detonation path completed to establish the "armed" condition of device **10** after a momentary hydrodynamic pressure on the water impact subsystem **40** subsides. In such "armed" condition, a firing signal from the target detection device **16** within the deployed delivery envelope casing, is awaited.

Referring now to FIG. **3**, the lanyard **24** extends into a cylindrical housing **50** of the safety section **18** through a bearing assembly **52** radially offset from the axis of housing **50**. The lanyard **24** in the retracted storage position shown, is wound upon a spool **54** of the lanyard subsystem **34** aforementioned, which also includes a gear train having a drive gear **56** fixed to the spool **54** and rotatably mounted therewith in the housing **50** by shaft **58**. The spool **54** is drivingly connected by the gear train to a driven shaft **60** having a pinion gear **62** at one axial end thereof in mesh with idler gear **64** also rotatably mounted in the housing and in mesh with the drive gear **56**. A shear pin **66** constituting one of the safe jettison controls **38** extends from a radially outer portion of spool **54** into the housing to hold the spool fixed during storage of the lanyard **24** wound thereon. In response to the pull exerted on the lanyard by the arming unit **14** in excess of 40 pounds, the resulting torque applied to the spool **54** causes shear of the pin **66** to release the spool for rotational payout of the lanyard. Such rotational movement is transferred from spool **54** to shaft **60** by the gears **56**, **64** and **62**.

The shaft **60** is connected to a barrel **68** in the safety section **18** to which an energy storage clock spring **70** is fixed at its radially inner end to the delay drive mechanism **36** by an arbor **72** on which the barrel **68** is rotatably mounted. The rotation imparted to the barrel **68** through shaft **60** by the gearing **56**, **64**, **62** in response to lanyard payout, thus causes clock spring **70** to be wound within the barrel **68** for storage of mechanical energy therein. Such rotation of barrel **68** is also imparted by shaft **60** to a threaded tubular shaft **74** extending axially from the barrel **68** as shown in FIG. **3**.

While the energy storing clock spring **70** is being wound within barrel **68**, rotation of the threaded tubular shaft **74** causes axial displacement of a nut **76** threadedly mounted thereon, as more clearly seen in FIG. **4**, to form another one of the safe jettison controls **38**. A pin **78** projecting from nut **76** into an axial guide slot **79** formed in housing **50**, limits its rotational displacement thereby enabling axial movement of nut **76** as the barrel rotates. A shoulder on barrel **68** limits such axial movement of the nut **76**, to thereby enable the water impact subsystem **40** as hereinafter explained. In the axial limit position of the nut **76**, corresponding to complete lanyard deployment and full winding of clock spring **70**, further rotation of the barrel **68** is stopped. Further payout of the lanyard **24** is thereby resisted by the barrel **68** with sufficient force so that when the tension in the lanyard exceeds about 150 pounds, the swivel **25** fails and the lanyard **24** is thus disconnected from the aircraft arming unit **14** with most of it retained within the device **10** to avoid the aircraft becoming unencumbered by the lanyard.

The water impact system **40** includes a hydrodynamic piston **80** slidably displaceable within an axial bore **82** formed in the housing **50**. The piston **80** is biased by a calibrated spring **84** into abutment with a stop element **86** in the housing having a passage **88** through which fluid communication is established between the piston bore **82** on one axial side of piston **80** and an external water entry opening **90** in the housing as shown in FIG. **3**. An o-ring seal **92** on the piston **80**, isolates the piston spring **84** within bore **82** on the other axial side of piston **80**. An elongated piston rod **94** extends from the piston **80** through a diametrically smaller bore **96** from the housing **50** into the arming section **20** of device **10**. Accordingly, the pressure of water entering opening **90** is exerted through passage **88** on the piston **80** causing its displacement against the bias of spring **84** to detect the generation of a hydrodynamic pressure during travel of device **10** through water at a predetermined high velocity characteristic of the low altitude, high speed aircraft mine laying operation.

Initial axial displacement of the piston **80** of the water impact subsystem **40** toward its armed position, is limited to a short distance by its engagement with the nut **76** of the safe jettison controls **38**, which also includes a lock-out release operated by means of a formation **98** on the piston rod **94** when displaced from the safe position shown in FIG. **3**. In such safe position, the lock-out release formation **98** holds a spring-biased jettison detent **100** in its retracted position within the housing **50** as more clearly seen in FIG. **5**. When released from its retracted position, the detent **100** engages and latches the barrel **68** to thereby prevent continued winding of the energy storing spring **70** after water entry is detected.

With continued reference to FIG. **3**, the piston rod **94** extends from the housing **50** of the safety section **18** into the housing **51** of the arming section **20** to actuate the turn-on switch **96** by means of a plunger **99** in response to displacement of the piston **80** to its armed position. When actuated, the switch **96** electrically connects power supply **123** to the target detection device **16** to turn it on as diagrammed in FIG. **2**. Displacement of the piston rod **94** to its armed position moves its reduced diameter portion **101** into underlying relations to a lock-out pin **102** which is thereby released for axial displacement by a spring **103** as shown in FIG. **6**. The large diameter end portion **105** of the lock-out pin **102** is then moved by spring **103** to a position locking the piston rod **94** in its armed position following dissipation of momentary hydrodynamic pressure exerted on piston **80**. A rotor **104** is also released by the piston rod **94** so that it may begin to turn under the torque applied thereto by the energy storing spring **70** through arbor **72** and the gearing of the time delay mechanism **36**.

The gearing of the time delay drive mechanism **36** as depicted in FIG. **7** includes an input gear train **106** of increasing drive ratio connecting the low speed arbor **72** to a high speed dynamically unbalanced coupler gear **108**

which is limited to a maximum rotational speed to provide the desired arming time. The gearing of the time delay mechanism **36** also includes an output gear train **110** of decreasing drive ratio connecting high speed coupler gear **108** to a low speed output gear **112** which angularly displaces the rotor **104** from a safe position to a position bringing a detonator **114** carried therein into alignment with lead **116** of the explosive train **28**. The detonator **114** is thereby actuated to safely complete an explosive path to a bomb warhead **117** as diagrammed in FIG. **2**, through a booster pellet **18** as shown in FIG. **3**.

The safe-enable mechanism **42** hereinbefore referred to in connection with FIG. **2**, includes a safety pin **120** which locks the piston **40** in its position engaging the rotor **104** and extending therefrom externally of the device **10**, as shown in FIG. **1**, to signify that the rotor **104** is in its safe position physically holding the detonator **114** electrically shorted in its out-of-line relationship to the leads **116**. Also, a red portion of the lanyard **24** located inside of the safety section **18** of device **10** denotes that it is in its "safe" condition. The red portion of the lanyard therefore becomes visible only after sufficient lanyard payout occurs causing rupture of the shear pin **66** as hereinbefore described. Finally, a knob **122** is provided as part of the safe-enable mechanism externally mounted on housing **50** of device **10** as shown in FIG. **1**, to signify that the hydrodynamic impact detecting piston **80** is in its safe position.

Obviously, other modifications and variations of the present invention may be possible in light of the foregoing teachings. It is therefore to be understood that within the scope of the appended claims the invention may be practiced otherwise than as specifically described.

What is claimed is:

1. A safety arming system adapted to be installed within a delivery envelope together with an explosive device detonated in response to a firing signal from a target detector, said system comprising: means responsive to deployment of said delivery envelope for establishment of an armed condition therein; explosive path means operatively connected to the target detector for conducting said firing signal only in said armed condition to the explosive device; and environmental means responsive to detection of a high velocity of the delivery envelop during water travel for maintenance of a safe condition during which said establishment of the armed condition is prevented.

2. A system for deployment of an underwater mine from an aircraft, including a lanyard connected to the aircraft, means for controlling payout of the lanyard from the aircraft, and explosive means associated with the underwater mine for detonation in response to a firing signal from a target detector after said payout of the lanyard, the improvement residing in means operatively connecting the lanyard to the explosive means for establishment of an armed condition during which said detonation occurs; water impact means for detection of water travel of the mine above a predetermined velocity; safe conditioning means for preventing said establishment of the armed condition until said detection of the water travel by the water impact means, a spool on which the lanyard is retained wound within the mine; and spring means connected to the spool for energy storage in response to payout of the lanyard from the spool during said deployment of the mine.

3. A safety arming system adapted to be installed within a delivery envelope together with an explosive device detonated in response to a firing signal from a target detector, said system comprising: means responsive to deployment of said delivery envelope for establishment of an armed condition therein; explosive path means operatively connected to the target detector for conducting said firing signal only in said armed condition to the explosive device; and environmental responsive means operatively connected to the explosive path means for maintenance of a safe condition during which said establishment of the armed condition is prevented said deployment responsive means comprising: a lanyard; a spool on which the lanyard is retained wound within the delivery envelope; and spring means connected to the spool for energy storage in response to payout of the lanyard from the spool during said deployment of the delivery envelope.

4. The system as defined in claim **3**, including drive means connecting the deployment responsive means to the explosive path means for delaying said establishment of the armed condition.

5. The system as defined in claim **4** wherein said drive means comprises time delay gearing drivingly connecting the energy storage means to the explosive path means.

6. The system as defined in claim **5** wherein said explosive path means includes: a detonator and shorting means driven by said drive means for displacement of the detonator to a position establishing said armed condition.

7. The system as defined in claim **6** wherein said environmental responsive means includes: a piston engageable with the shorting means; fluid passage means exposing the piston to hydrodynamic pressure during said deployment for movement of the piston; and enabling control means for sequentially limiting said movement of the piston during performance of said energy storage by the spring means in response to payout of the lanyard followed by release of the spring means and release of the shorting means to permit said displacement of the detonator in response to continued movement of the piston.

8. The system as defined in claim **3** wherein said environmental responsive means includes: a piston; fluid passage means exposing the piston to hydrodynamic pressure during said deployment for movement of the piston; and enabling control means for limiting said movement of the piston during performance of said energy storage by the spring means in response to payout of the lanyard followed by release of the spring means.

9. A safety and arming system adapted to be installed within a delivery envelope together with an explosive device detonated in response to a firing signal from a target detector, said system comprising: means responsive to deployment of said delivery envelope for establishment of an armed condition therein; a detonator; displacement means for displacing the detonator to a position establishing said armed condition upon release from constraint; a piston engageable with the displacement means; fluid passage means exposing the piston to hydrodynamic pressure generated during water travel of the delivery envelope at a high velocity for movement of the piston; and enabling control means for limiting said movement of the piston followed by said release of the displacement means to permit said displacing of the detonator.

10. The system as defined in claim **9**, including drive means connecting the deployment responsive means to the displacement means for delaying said establishment of the armed condition.

11. A safety arming system adapted to be installed within a delivery envelope together with an explosive device detonated in response to a firing signal from a target detector, said system comprising: means responsive to deployment of said delivery envelope for establishment of an armed condition therein; a detonator; displacement means for displac-

ing the detonator to a position establishing said armed condition upon release from constraint; a piston engageable with the displacement means; fluid passage means exposing the piston to hydrodynamic pressure during said deployment for movement of the piston; and enabling control means for limiting said movement of the piston during said deployment of the delivery envelope followed by said release of the displacement means to permit said displacing of the detonator, and drive means connecting the deployment responsive means to the displacement means for delaying said establishment of the armed condition, said deployment responsive means comprising: a lanyard; a spool on which the lanyard is retained wound within the delivery envelope; and spring means connected to the spool for energy storage in response to payout of the lanyard from the spool during said deployment of the delivery envelope.

12. A system for deployment of an underwater mine from an aircraft, including a lanyard connected to the aircraft, means for controlling payout of the lanyard from the aircraft, and explosive means associated with the underwater mine for detonation in response to a firing signal from a target detector after said payout of the lanyard, the improvement residing in; means operatively connecting the lanyard to the explosive means for establishment of an armed condition during which said detonation occurs; water impact means for detection of water travel of the mine above a predetermined velocity; and safe conditioning means for preventing said establishment of the armed condition until said detection of the water travel by the water impact means.

* * * * *