US005647265A

United States Patent [19]

Johnson et al.

[11] Patent Number: 5,647,265

[45] Date of Patent: Jul. 15, 1997

[54] **TOOL AND SYSTEM FOR MACHINING A ROUND STRAND**

[75] Inventors: **James T. Johnson**, King George, Va.; **Frank E. Kolstrom**, Indian Head, Md.

[73] Assignee: **The United States of America as represented by the Secretary of the Navy**, Washington, D.C.

[21] Appl. No.: **84,057**

[22] Filed: **Jun. 30, 1993**

[51] **Int. Cl.**[6] **B26D 3/00**; G01N 1/04

[52] **U.S. Cl.** **83/861**; 83/123; 83/165; 83/167; 83/435.11; 83/451; 83/856; 83/919; 73/864.41

[58] **Field of Search** 83/111, 123, 165, 83/451, 651, 856, 861, 875, 919, 686, 688, 689, 167, 435.11; 30/279.2, 280, 316; 73/864.41, 864.44, 864.45

[56] **References Cited**

U.S. PATENT DOCUMENTS

1,530,822	3/1925	Gibson	30/279.2
3,074,162	1/1963	Lentini	83/861
4,565,910	1/1986	Peterson	83/875
4,598,597	7/1986	Widner et al.	83/919
4,895,197	1/1990	Andersen	144/369
5,035,409	7/1991	Mulliner	269/21
5,048,804	9/1991	Ito	269/21
5,065,804	11/1991	Kinuhata et al.	83/875
5,103,684	4/1992	Denton	73/864.41
5,141,212	8/1992	Beeding	269/21
5,180,000	1/1993	Wagner et al.	165/80.1

FOREIGN PATENT DOCUMENTS

288014	4/1928	United Kingdom	30/316

Primary Examiner—Eugenia Jones
Attorney, Agent, or Firm—Jacob Shuster

[57] **ABSTRACT**

A system including a cutting tool is provided for cutting a round strand from a soft, rubber-based material. The cutting tool comprises a tube having an inner and an outer surface which form a sharp leading edge. The tool further comprises a blade which fixedly attaches to the outer surface of the cutting tube. The blade has a wedge-shaped leading edge and a circular-shaped arc on its bottom end for receiving the tube. A handle for the blade attaches to the top end of the blade. The system for cutting a round strand from a soft, rubber-based material also includes an arbor support arm, a vacuum chuck plate, and a horizontal milling machine having a numerical control. The arbor support arm connects to the handle of the cutting tool. The arbor support arm in turn connects to the horizontal milling machine. The vacuum chuck plate also connects to the horizontal milling machine at a table. The vacuum chuck plate has a cylindrical pin which extracts any round strands stuck in the cutting tube. The vacuum chuck plate also has a sloped surface for extracted round strands to roll into a collecting bin.

10 Claims, 5 Drawing Sheets

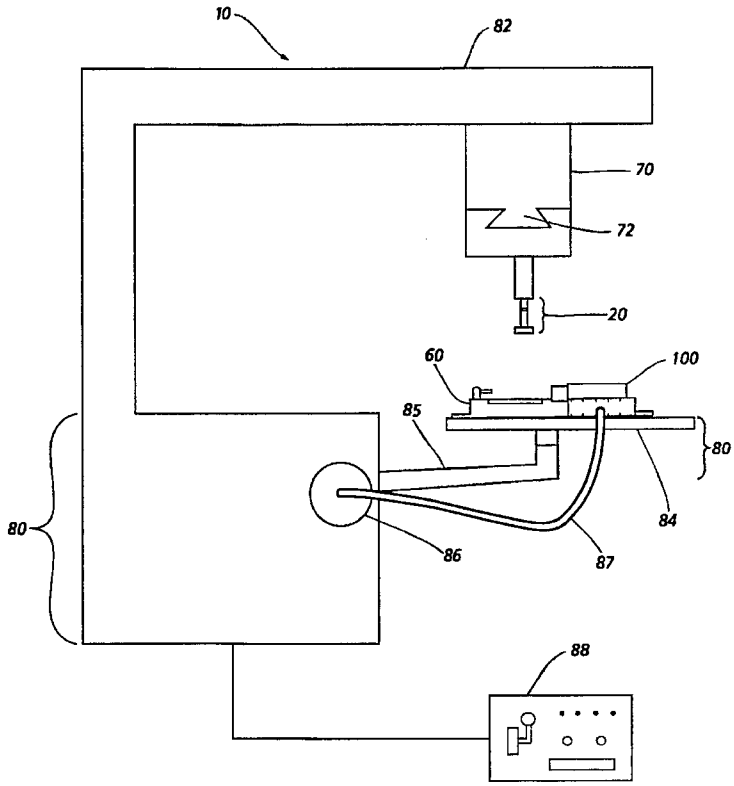

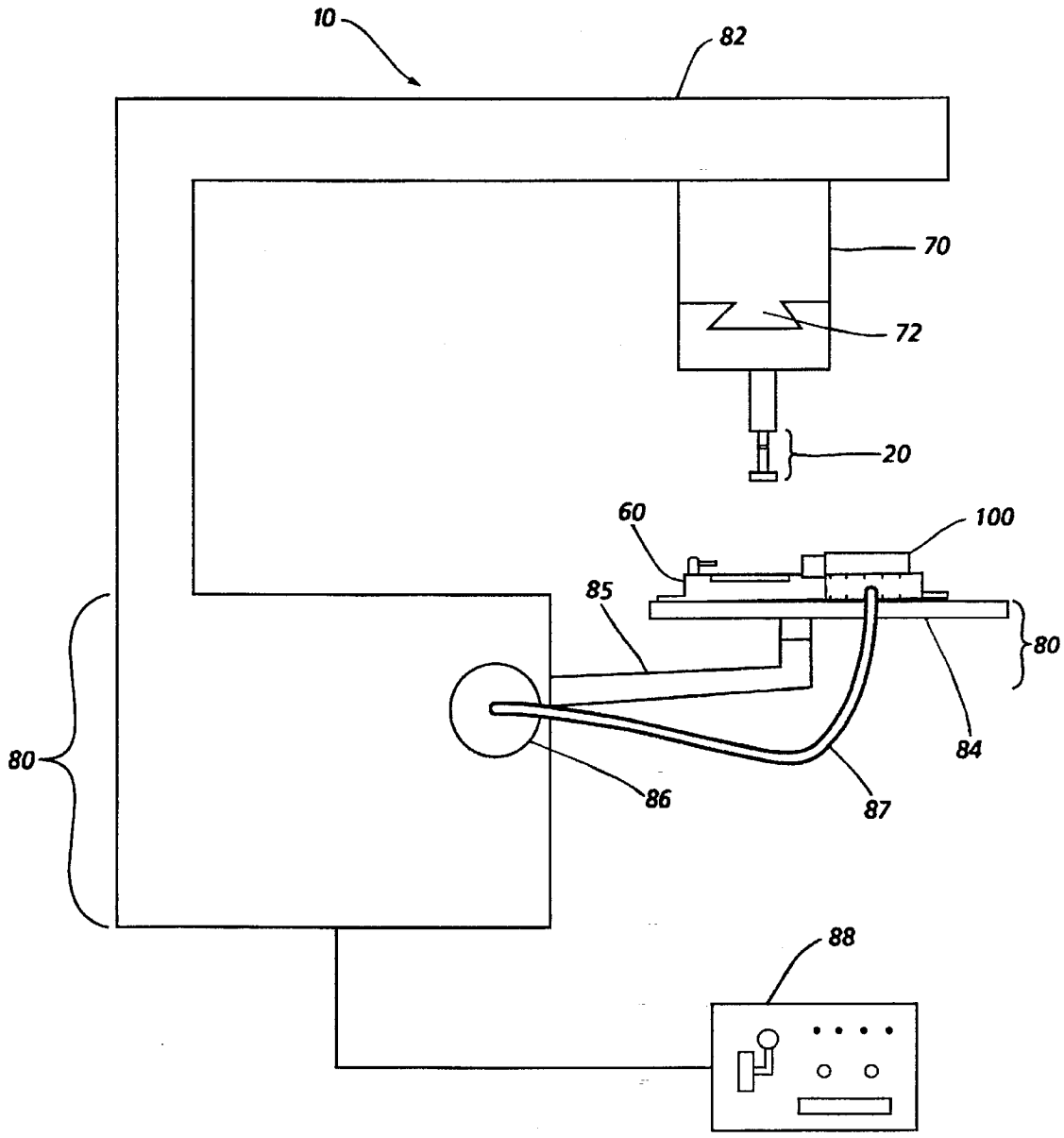

FIG. 1

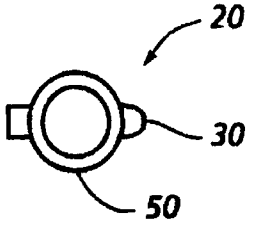

FIG. 2A

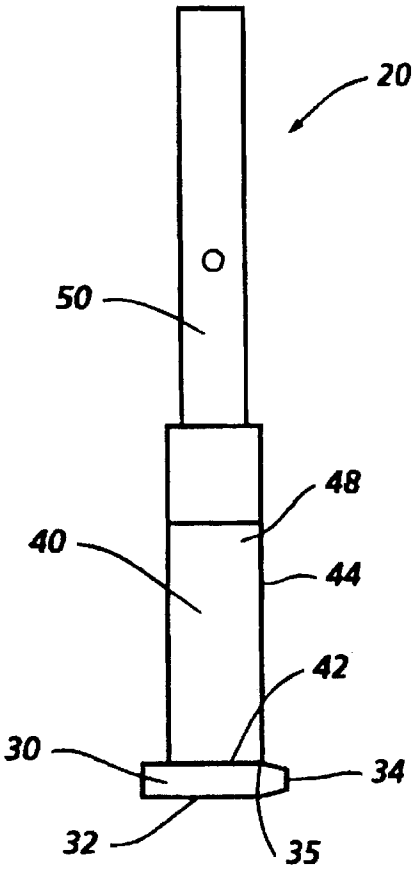

FIG. 2B

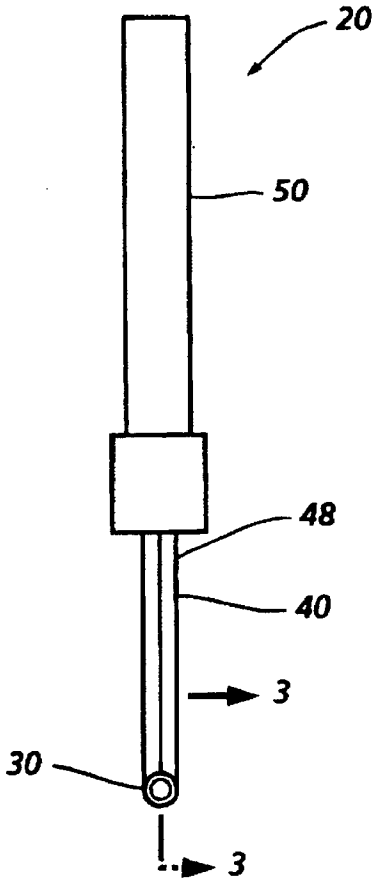

FIG. 2C

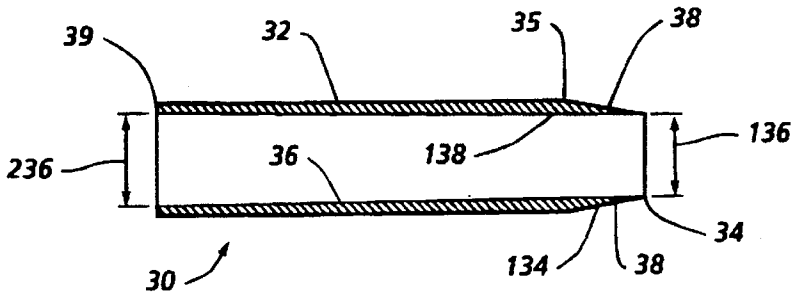

FIG. 3

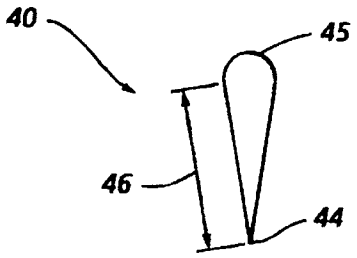

FIG. 4A

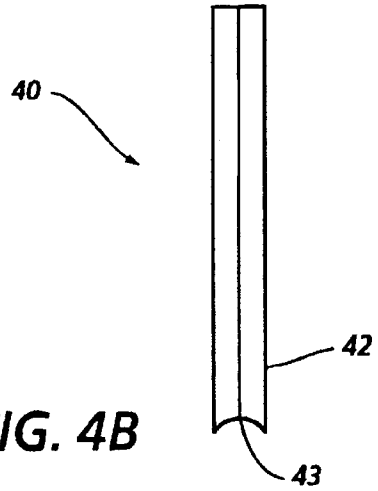

FIG. 4B

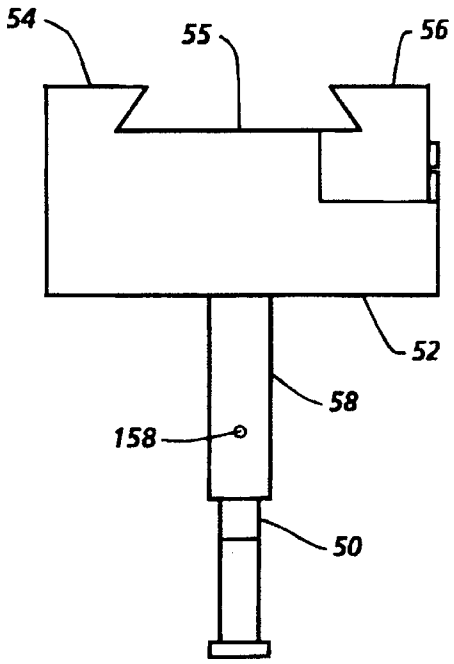

FIG. 5A

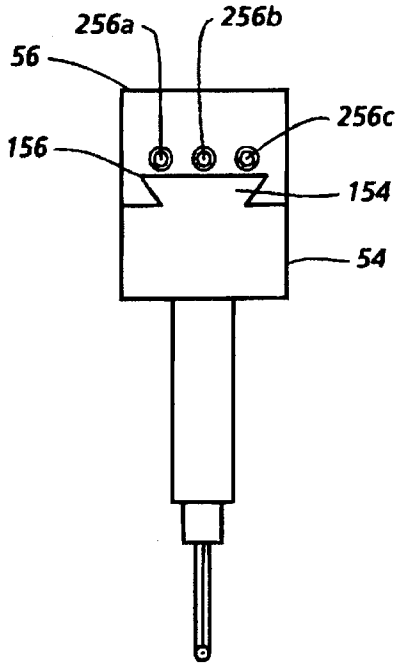

FIG. 5B

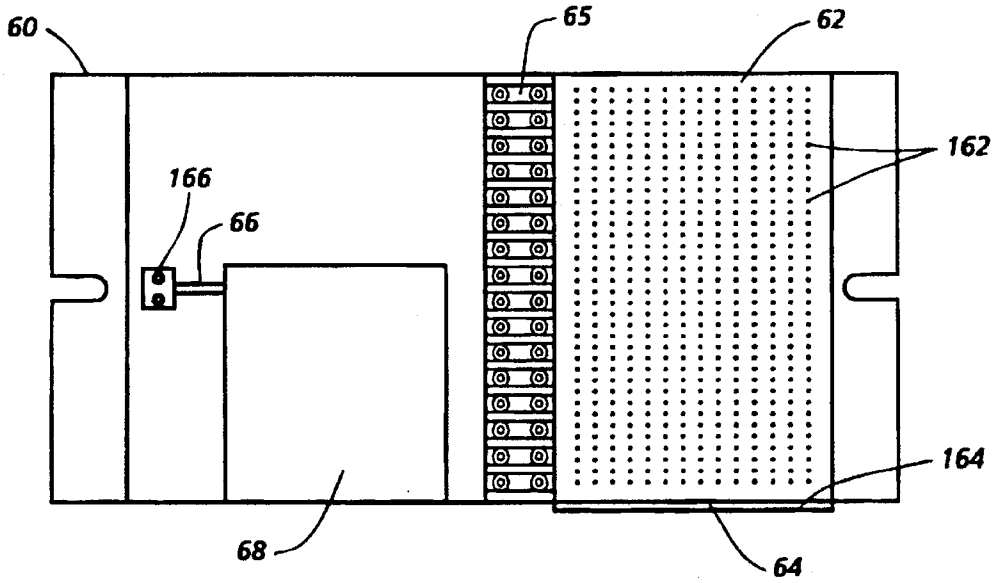

FIG. 6

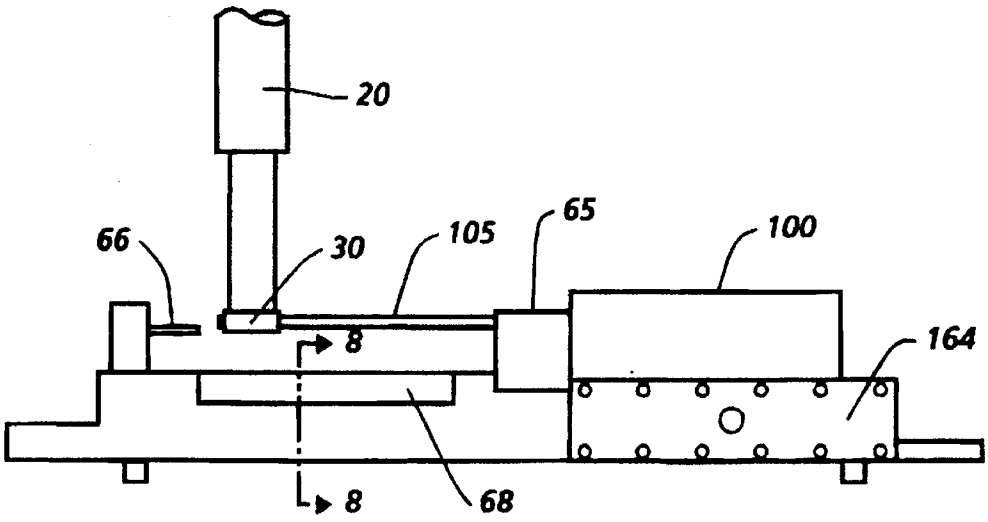

FIG. 7

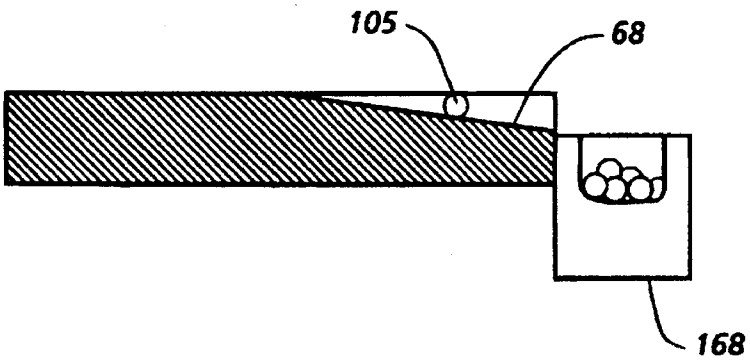

FIG. 8

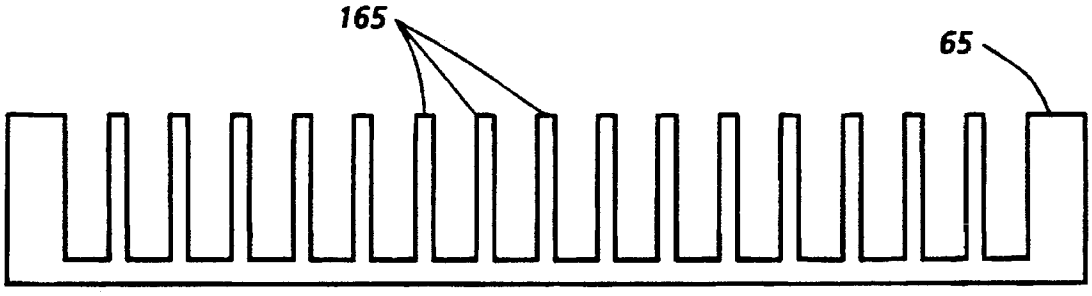

FIG. 9

TOOL AND SYSTEM FOR MACHINING A ROUND STRAND

ORIGIN OF THE INVENTION

The invention described herein was made in the performance of official duties by an employee of the Department of the Navy and may be manufactured, used, licensed by or for the Government for any governmental purpose without payment of any royalties thereon.

FIELD OF THE INVENTION

The present invention relates generally to a cutting apparatus for soft materials and more particularly to a cutting apparatus having a cutting tube.

BACKGROUND OF THE INVENTION

Rubber-based propellants are typically tested for burning rate as part of quality control. This burning rate test involves the placement of a strand of the propellant in a cylindrical bomb and the ignition of the strand by a hot electrical wire. The test then records the start and stop times of the combustion of the strand over a specified distance. A burning rate may then be calculated.

Testing engineers have determined that cross-sectionally round or cylindrical strands of propellant provide better results in burning rate tests because round strands tend to combust more homogeneously from start to finish. Accordingly, engineers and technicians have sought methods for manufacturing or machining round strands of rubber-based propellants.

Related methods of machining strands of rubber-based propellants recognize safety precautions concerning the explosive nature of rubber-based propellants. These safety concerns require a technician operating a milling machine to control and observe the cutting of the propellant from a remote location. One example of remote operation involves a remotely-controlled guillotine cutter. The guillotine cutter simply cuts the soft propellant in two directions to provide a rectangularly-shaped strand. If the technician then wishes to produce a round strand, he must manually trim the corners of the rectangular strand. This method has two distinct disadvantages. First, the method requires the technician to come into physical contact with the propellant during cutting. This contact contradicts the recognized safety precautions normally followed during machining of rubber-based propellants. Second, the method includes an unautomated step of manual trimming, which increases the length of time necessary for machining a round strand.

Other cutting methods and devices of the related art include the belt skiving device of U.S. Pat. No. 4,656,910 by Peterson. Peterson discloses a device for cutting longitudinal channels or strips in the cover of a rubber conveyor belt. The device includes a U-shaped blade set at a specified angle relative to the surface of the conveyor belt. The U-shaped blade has a front portion with a sharp cutting edge. The blade cuts into the surface of the belt and removes rectangular, longitudinal strips.

SUMMARY OF THE INVENTION

Accordingly, an object of the present invention is to cut a round or cylindrical strand from a rubber-based propellant.

Another object is to machine a round strand safely from a rubber-based propellant.

Yet another object is to automate a system for machining round strands from a rubber-based propellant.

A further object of the invention is to lessen the time needed for machining a round strand from a rubber-based propellant.

The present invention attains the foregoing and additional objects by providing a tool and a system for cutting a round strand from a rubber-based material. The cutting tool comprises a tube, a blade, and a handle, preferably all made of stainless steel. The tube has an inner circumferential surface and an outer circumferential surface which forms a sharp leading edge. Alternatively, the tube has a second outer circumferential surface which combines with the first outer surface to form an obtuse angle at a point behind the sharp leading edge of the tube. The blade fixedly attaches to the first outer circumferential surface of the tube. The blade has a wedge-shaped leading edge and a circular-shaped arc on its bottom which is shaped for receiving the cutting tube. The leading edge of the blade attaches to the outer circumferential surface at a point behind the leading edge of the tube. Preferably, the blade also has a round trailing edge. The handle attaches to the top end of the blade.

The system for cutting a round strand from a rubber-based material includes the previously-described cutting tool, an arbor support arm, a vacuum chuck plate, and a horizontal milling machine having a numerical control. Preferably, the system further comprises a pump for pulling a vacuum in the chuck plate. The handle of the cutting tool includes an adjustable block assembly having a dovetail groove. The handle attaches to a dovetail of the arbor support arm. The arbor support arm connects to the horizontal milling machine. The horizontal milling machine also has a table for receiving the vacuum chuck plate. The vacuum chuck plate has a locating pin which extracts any round strand stuck in the tube. The vacuum chuck plate also has a sloped surface located near the locating pin for the finished round strand to roll into a collecting bin.

Still other objects and advantages of the present invention will become readily apparent to those skilled in the art from the following drawings and detailed description, wherein only the preferred embodiment of the invention is shown and described, simply by way of illustration of the best mode contemplated of carrying out the invention. As will be realized, the invention is capable of other and different embodiments, and its several details are capable of modifications in various obvious respects, all without departing from the invention. Accordingly, the drawings and description are to be regarded as illustrative in nature, and not as restrictive.

BRIEF DESCRIPTION OF THE DRAWINGS

FIG. **1** illustrates a system for cutting a cylindrical strand from a rubber-based material;

FIGS. **2A**, **2B**, and **2C** are top, front, and side views, respectively, of a cutting tool in accordance with the present invention;

FIG. **3** is a cross-sectional view of the tube along line **3**—**3** of FIG. **2C**;

FIGS. **4A** and **4B** are top and front views, respectively, of a blade of the cutting tool;

FIGS. **5A** and **5B** are front and side views of the cutting tool having an adjustable block assembly;

FIG. **6** is a top view of a vacuum chuck plate of the present invention;

FIG. **7** illustrates a cutting tool having a cut round strand in accordance with the present invention.

FIG. **8** is a cross-sectional view of the vacuum chuck plate along line **8**—**8** of FIG. **7**; and

FIG. 9 is a side view of a spacing rack in accordance with the present invention.

DETAILED DESCRIPTION OF THE INVENTION

Referring now to FIG. 1, a system **10** for cutting a round strand from a working sample of a rubber-based propellant **100** is shown. Round strand, as used in this specification, refers to a cylindrically-shaped segment of the propellant. The system **10** comprises a cutting tool **20**, a vacuum chuck plate **60**, an arbor support arm **70**, and a horizontal milling machine **80**, the horizontal milling machine being generally known in the art. The cutting tool **20** connects to a dovetail **72** of the arbor support arm **70**, which in turn connects to a support bar **82** of the milling machine **80**. The vacuum chuck plate **60** connects to a table **84** of the milling machine. The table **84** is positioned under the cutting tool **20**.

The milling machine **80** has a vacuum pump **86** and a numerical control **88** for both remote and automatic operation of the system. The vacuum pump **86**, connected to vacuum chuck plate **60** by flexible line **87**, is one commonly known in the art such as the Stokes Microvac which can pull a vacuum of 40 cubic feet per minute. The numerical control **88** is a standard numerical control system as is commonly known in the art of milling machines, such as the A.I.T. horizontal mill. During its operation, the milling machine using table support arm **85** moves the table **84** into various positions, in a manner known in the art, while the cutting tool **20** remains stationary above the vacuum chuck plate **60** and the working sample **100**. Alternatively, the arbor support arm **70** may maneuver the cutting tool **20** into the working material to perform the cuts.

As shown in FIGS. 2A–2C, the cutting tool **20** comprises a tube **30**, a blade **40**, and a handle **50**. Preferably, the tube, the blade and the handle are made of stainless steel. As shown in FIG. 2B, the tube has an outer circumferential surface **32** and a leading edge **34**. The blade **40** fixedly attaches to the outer circumferential surface **32** of the tube at a bottom end **42** of the blade. The blade **40** also has a leading edge **44**. The leading edge **44** of the blade attaches to the outer circumferential surface **32** of the tube **30** at a point **35** which is behind the leading edge **34** of the tube. As shown in FIG. 2B and FIG. 2C, the handle **50** is a tubular extension which fixedly attaches to a top end **48** of the blade.

As seen in FIG. 3, the tube **30** has an inner circumferential surface **36** and a second outer circumferential surface **38**. The inner surface **36** and second outer surface **32** form an acute angle **134** and give the tube the sharp leading edge **34**. The sharp leading edge enables the tube **30** to cut easily into the soft working sample of rubber-based propellant. The tube **30** also has a first inner diameter **136** at the leading edge **34** and a second inner diameter **236** at a trailing edge **39**. The first inner diameter **136** is slightly smaller than the second inner diameter **236**. The slight expansion of the inner diameters of the tube assists the tube in passing through the working sample.

The second outer circumferential surface **38** intersects with the first outer surface **32** at a plurality of points **35** to form a plurality of obtuse angles **138** which are behind the sharp leading edge **34** of the tube. Each obtuse angle **138** has a vertex on the line of points **35** at which the leading edge **44** of blade **40** is attached to the outer circumferential surface **32** of tube **30** as shown previously in FIG. 2B.

FIG. 4A illustrates the blade **40** has a wedge-shape **46** for the leading edge **44** and a round trailing edge **45**. Referring to FIG. 4B, a circular-shaped arc **43**, located at the bottom end **42** of the blade is fitted for receiving the tube.

Placing the blade behind the leading edge of the tube enables the tube to make a first cylindrical cut into the working sample. As the tube then continues to cut through the sample, the blade makes a second cut which, because of the wedge shape of the blade, separates the upper surface and spreads the side surfaces of the sample. Accordingly, the blade assists the cutting action of the tube by reducing the surface tension on the working sample.

Referring now to FIG. 5A, an adjustable block assembly **52** comprises a main block **54**, an adjustable block **56**, and a socket **58**. The main block and the adjustable block combine to form a dovetail groove **55**. The handle **50** of the cutting tool inserts into the socket **58** and is fixedly attached by a locking pin or screw **158**. The adjustable block assembly accordingly attaches to the dovetail **72** of the arbor support arm shown in FIG. 1. Referring now to FIG. 5B, the main block **54** has its own dovetail **154** and the adjustable block **56** has its own dovetail groove **156**. The adjustable block **56** slides onto the dovetail **154** and then fixedly attaches to the main block **54** by three socket head cap screws **256***a–c*.

As shown in FIG. 6, the vacuum chuck plate **60**, which is preferably made of aluminum, has a flat surface **62** with a plurality of small-sized holes **162** and a manifold **64** which includes a gasket (not shown) and a cover plate **164**. The manifold **64** has a plurality of bores (not shown) which are in direct communication with the plurality of small-sized holes **162**. The chuck plate **60** also comprises a locating pin **66** which connects to a locating block **166**.

Referring now to FIGS. 6 and 7, the vacuum pump of the milling machine pulls a vacuum through the plurality of bores of the chuck plate **60** and, in turn, the holes **162**. This vacuum creates a lower pressure at the flat surface **62** upon which the working sample **100** sits. The lower pressure on the bottom surface of the working sample combines with the relatively higher pressure on the remaining surfaces of the sample to secure it during milling operations.

As shown in FIGS. 6 and 7, the cutting tool **20** is positioned with its leading edge **34** adjacent the locating pin **66** in order to remove a round cylindrical strand **105** from the working sample **100**. The cylindrical strand typically remains imbedded in the tube **30** after being cut. Accordingly, the locating pin **66** is displaced relative to the tube **30** by operation of the milling machine in a manner known in the art to thereby push and extract the cut strand **105** from the tube **30**.

After being pushed out of the tube, the round strand falls onto a sloped surface **68**. As shown in FIG. 8, the strand **105** then rolls down the surface **68** into a collecting bin **168**.

As seen in FIGS. 6 and 9, the vacuum chuck plate also has a rack **65** having a plurality of spacing juts **165**. The juts assist in spacing and aligning a cut round strand as the cutting tool moves toward the locating pin.

The unique features of this invention include a cutting tool having a tube with a sharp leading edge and a wedge-shaped blade with a circular-shaped arc on the bottom end. The cutting tool also has the leading edge of the blade begin at a point behind the sharp leading edge of the tube. Other unique features include a vacuum chuck plate having a locating pin which extracts a cut round strand from the tube and a sloped surface for transporting or rolling the extracted round strand into a collecting bin.

The advantages of this invention include the ability to machine a round strand from one pass through a rubber-based propellant. Other advantages include reducing the time needed to machine a round strand and eliminating a

technician's physical contact with the propellant during the cutting process. Yet other advantages include automating the entire cutting of the rubber-based propellant.

Although the invention has been described relative to a specific embodiment thereof, there are numerous variations and modifications that will be readily apparent to those skilled in the art in the light of the above teachings. It is therefore to be understood that, within the scope of the appended claims, the invention may be practiced other than as specifically described.

What is claimed as new and desired to be secured by Letters Patent of the United States is:

1. In a system having a milling machine for cutting a cylindrical strand from a rubber-based material, the improvement comprising:

a tube having an outer circumferential surface and a sharp leading edge;

a blade having a top end and a bottom end and being fixedly attached to the outer circumferential surface of said tube at the bottom end of said blade, said blade also having a wedge-shaped leading edge and a circular-shaped arc on the bottom end for receiving said tube;

a handle connected to the top end of said blade;

an arbor support arm connecting said handle to the milling machine which has a moveable table and a vacuum chuck plate attached to said moveable table on which the rubber-based material is carried.

2. In a system for cutting a cylindrical strand from a rubber-based material, as recited in claim **1** wherein said handle includes an adjustable block assembly having a dovetail groove.

3. In a system for cutting a cylindrical strand from a rubber-based material as recited in claim **2** wherein said arbor support arm has a dove tail for securely holding the adjustable block assembly of said handle.

4. In a system for cutting a cylindrical strand from rubber-based material as recited in claim **1** wherein said vacuum chuck plate mounts a locating pin for extracting the cylindrical strand from said tube.

5. In a system for cutting a cylindrical strand from a rubber-based material as recited in claim **1** wherein said vacuum chuck plate includes a sloped surface for transporting the extracted cylindrical strand.

6. In a system for cutting a cylindrical strand from rubber-based material as recited in claim **1** wherein said vacuum chuck plate includes a rack having a plurality of juts for spacing a plurality of cut cylindrical strands.

7. In a system for cutting a cylindrical strand from rubber-based material as recited in claim **1** wherein said vacuum chuck plate has a flat outer surface with a plurality of suction holes.

8. In a system for cutting a cylindrical strand from a rubber-based material as recited in claim **1** wherein said vacuum chuck plate is made of aluminum.

9. In a system for cutting a cylindrical strand from a rubber-based material as recited in claim **1** further comprising a numerical control for remotely and automatically operating the system.

10. In a system for cutting a cylindrical strand from a rubber-based material as recited in claim **1** further comprising a vacuum pump for pulling a vacuum in said vacuum chuck plate.

* * * * *