US005461648A

# United States Patent [19]

**Nauflett et al.**

[11] **Patent Number: 5,461,648**

[45] **Date of Patent: Oct. 24, 1995**

[54] **SUPERCRITICAL WATER OXIDATION REACTOR WITH A CORROSION-RESISTANT LINING**

[75] Inventors: **George W. Nauflett**, Oxon Hill; **Robert E. Farncomb**, Accokeek, both of Md.; **M. Lalith Kumar**, Pittsburg, Pa.

[73] Assignee: **The United States of America as represented by the Secretary of the Navy**, Washington, D.C.

[21] Appl. No.: **329,417**

[22] Filed: **Oct. 27, 1994**

[51] **Int. Cl.**[6] ..... **G21C 9/00**

[52] **U.S. Cl.** ..... **376/305**; 376/292; 376/299; 376/312; 376/405; 376/306

[58] **Field of Search** ..... 376/305, 292, 376/299, 312, 405, 306; 588/16, 20, 8, 233, 236; 210/759, 178, 193; 165/2, 133; 252/181.3, 310

[56] **References Cited**

U.S. PATENT DOCUMENTS

| | | | |
|---|---|---|---|
| 3,375,169 | 3/1968 | McHugh et al. | 176/30 |
| 4,297,246 | 10/1981 | Cairns et al. | 252/465 |
| 4,421,569 | 12/1983 | Dichter et al. | 148/6.14 |
| 5,036,903 | 8/1991 | Shook | 165/1 |
| 5,092,129 | 3/1992 | Bayes et al. | 62/3.3 |
| 5,106,513 | 4/1992 | Hong | 210/759 |
| 5,108,697 | 4/1992 | Esposito et al. | 376/306 |
| 5,118,530 | 6/1992 | Hanneman et al. | 427/226 |
| 5,130,080 | 7/1992 | Niedrach | 376/305 |
| 5,130,081 | 7/1992 | Niedrach | 376/305 |
| 5,135,709 | 8/1992 | Andresen et al. | 376/305 |
| 5,147,597 | 9/1992 | Roofthooft et al. | 376/305 |
| 5,164,152 | 11/1992 | Kim et al. | 376/305 |
| 5,232,604 | 8/1993 | Swallow et al. | 210/759 |
| 5,313,965 | 5/1994 | Palen | 134/61 |
| 5,372,725 | 12/1994 | Halff et al. | 210/761 |
| 5,384,051 | 1/1995 | McGinness | 210/761 |
| 5,387,398 | 2/1995 | Mueggenburg et al. | 422/168 |

*Primary Examiner*—Donald P. Walsh
*Assistant Examiner*—Meena Chelliah
*Attorney, Agent, or Firm*—Roger D. Johnson

[57] **ABSTRACT**

A supercritical water oxidation reactor includes a vessel with an interior surface, two cooling sections, a heat exchanger, an oxygenating section, a pump, and a trap. The interior surface of the vessel has a corrosion-resistant, artificial ceramic or diamond-like coating. The artificial diamond coating is thin and crystal-like in structure. The heat exchanger is located between the two cooling sections. The heat exchanger and the two cooling sections surround the exterior of the vessel. The oxygenating section comprises a porous cylindrical baffle positioned within the vessel. The porous baffle transfers oxygen, hydrogen peroxide, or other oxygenating substances to an aqueous hazardous waste introduced into the reactor.

In accordance with another aspect of the invention, the oxygenating section includes a shaft having a helical extension. The shaft has a corrosion-resistant, artificial diamond or diamond-like coating on its outer surface. The shaft rotates the helical extension to assist in removing solids from the aqueous hazardous waste.

**8 Claims, 3 Drawing Sheets**

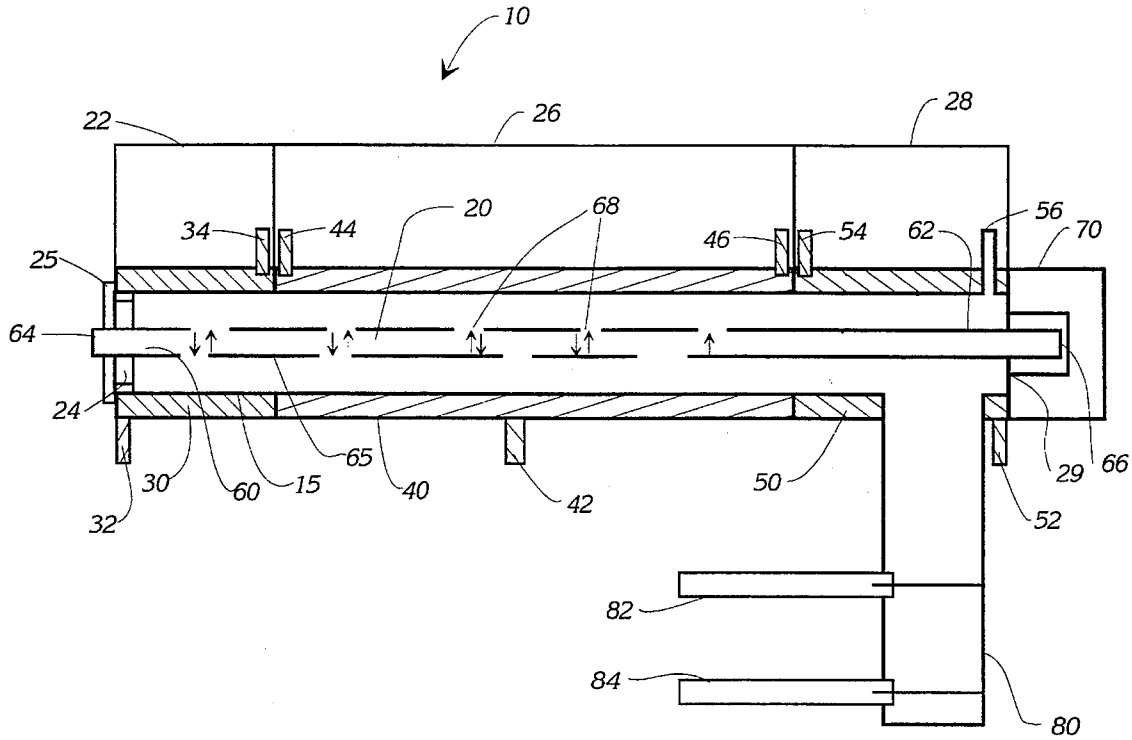

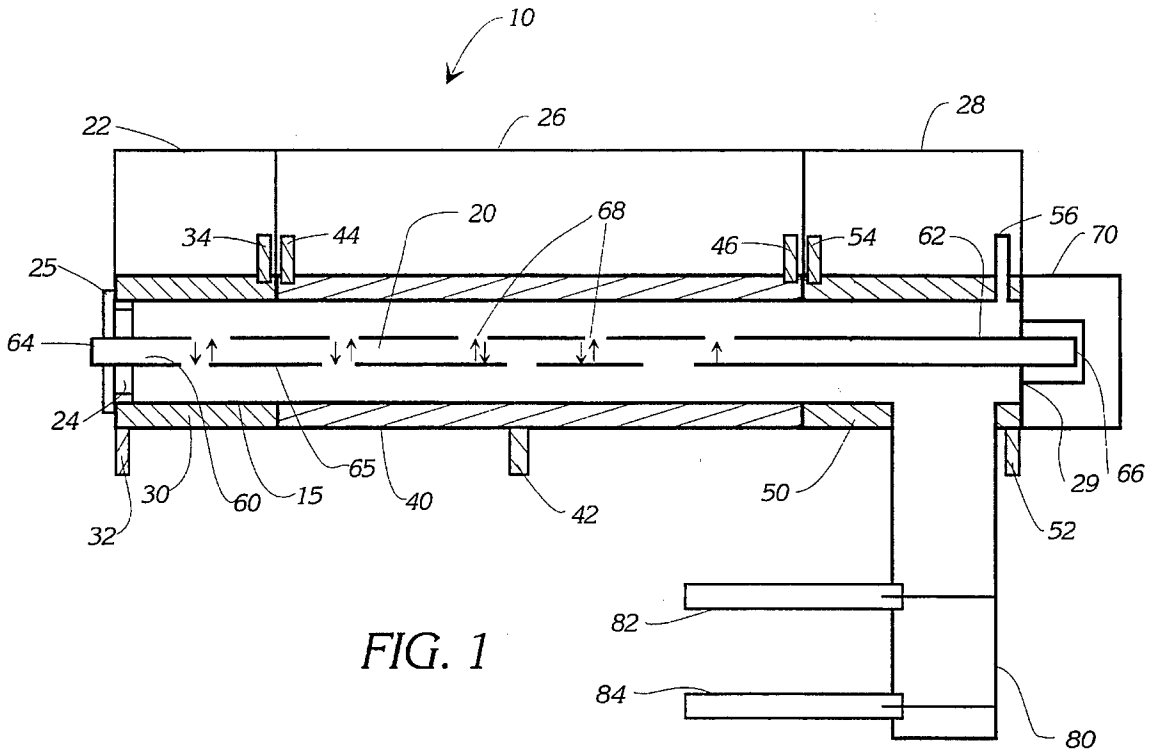
10
22
26
28
34
44
20
68
46
54
62
56
70
25
64
24
30
60
15
65
40
42
50
29
66
52
32
82
84
80

FIG. 1

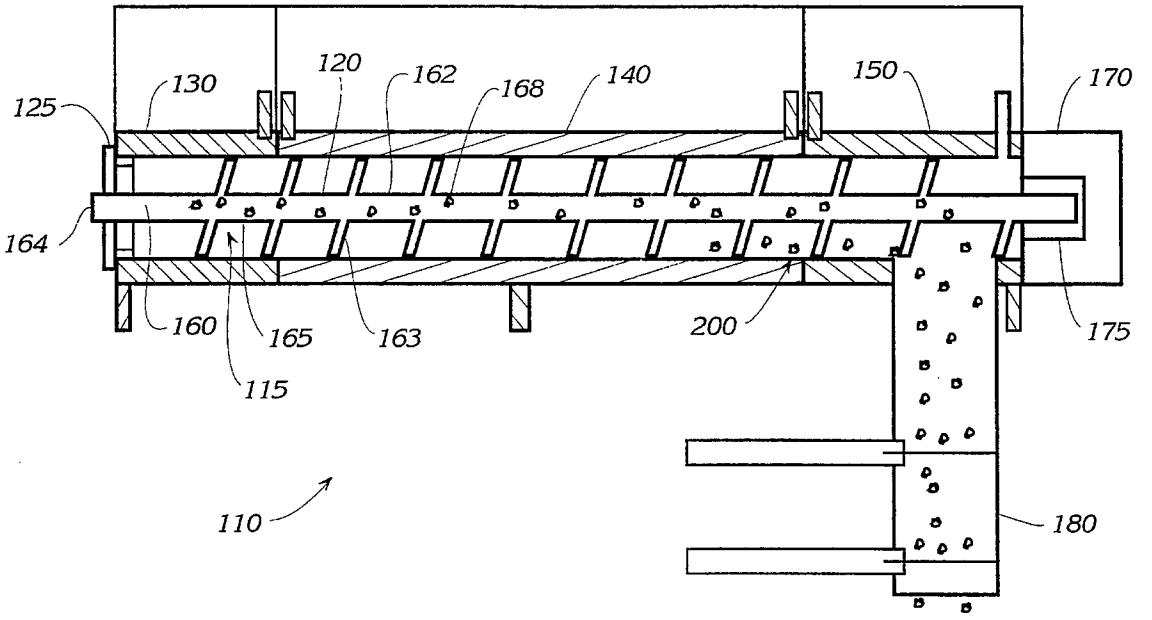
125
130
120
162
168
140
150
170
164
160
165
163
200
175
115
110
180

FIG. 2

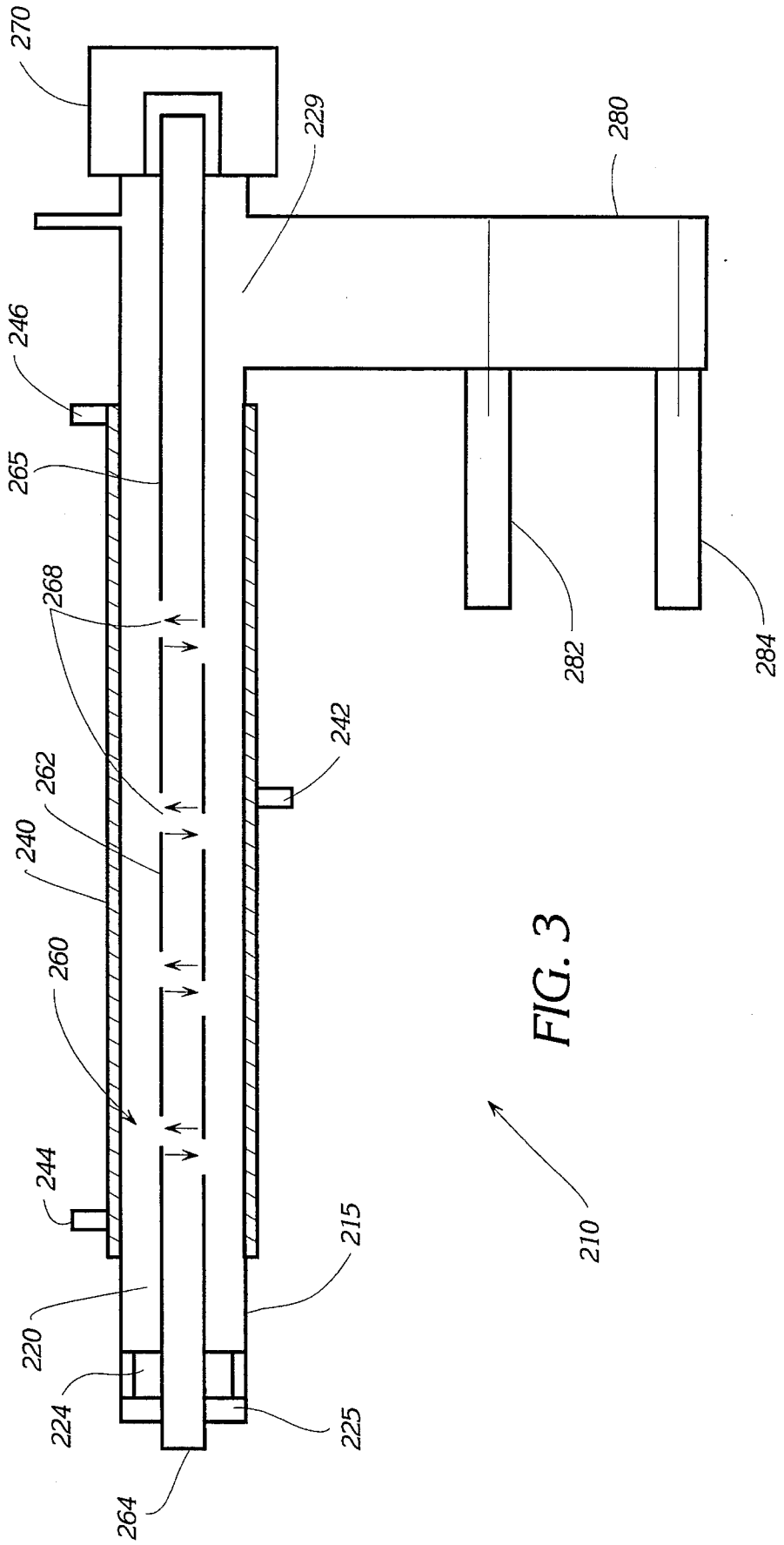
270
229
280
246
265
268
282
284
242
262
240
260
244
215
210
220
224
225
264

FIG. 3

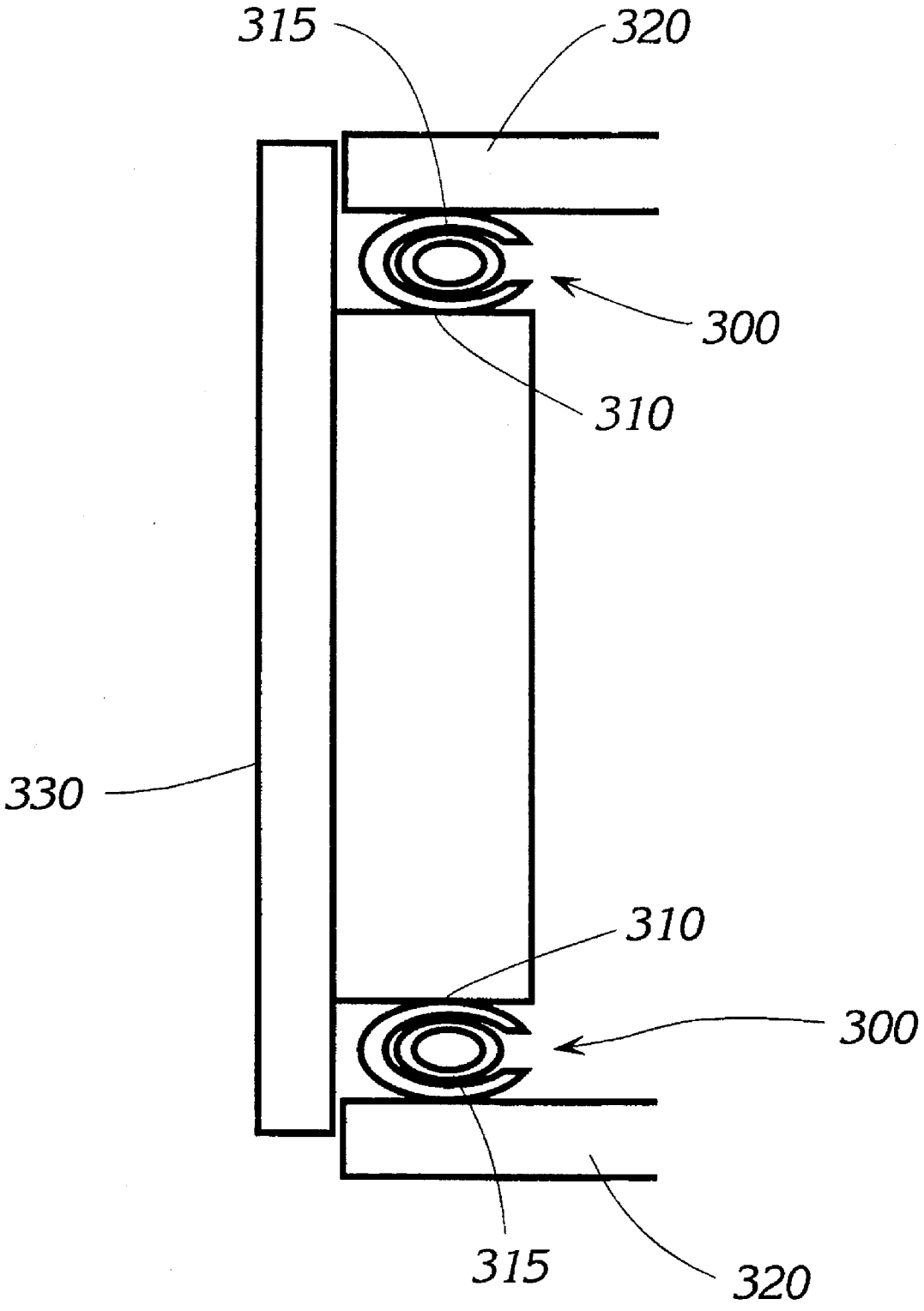


FIG. 4

# SUPERCRITICAL WATER OXIDATION REACTOR WITH A CORROSION-RESISTANT LINING

The invention described herein was made in the performance of official duties by a Navy contractor from Thar Designs, Inc. in conjunction with an employee of the Department of the Navy and may be manufactured, used, licensed by or for the Government for any governmental purpose without payment of any royalties thereon.

## FIELD OF THE INVENTION

The present invention relates generally to a corrosion-resistant reactor and more particularly to a supercritical water oxidation reactor with a corrosion-resistant lining.

## BACKGROUND OF THE INVENTION

The Department of Energy has chosen supercritical water oxidation as a promising technique for destroying hazardous and radioactive mixed waste. Supercritical water oxidation (SCWO) occurs by mixing water with hazardous waste and then heating and pressurizing this mixed water to supercritical values in an extraction vessel or reactor. The benefits of SCWO processes include short residence times, nearly complete efficiencies for destruction, and effectiveness for a large number of organic compounds.

One of the other advantages of SCWO includes its use of water. Water is inexpensive, non-toxic, and easily separated from many products. Water is also a convenient solvent because the material to be processed may already be in an aqueous solution, thereby eliminating the need to remove water from the final product. Further, the polarity of water can be controlled by temperature and pressure. Water is thus a good solvent for polar materials.

Unfortunately, the critical parameters of temperature and pressure for water are much higher than for other solvents. These high temperatures and pressures, plus the presence of oxygen, corrode the surfaces of any metallic pans located in a SCWO reactor. Severe metal corrosion occurs when the hazardous wastes include halogens and nitrates.

Current solutions to preventing severe corrosion to the metallic pans located in SCWO reactors include lining or coating these parts with exotic metals. Examples of such exotic metals include nickel, palladium, and alloys consisting mainly of nickel and copper or of nickel and chromium. These metals are expensive, difficult to machine, and cannot be coiled easily to provide a compact reaction chamber. Further, these exotic metal liners last for only a few hours of operation before their corrosion requires replacement. Accordingly, SCWO reactors need a smooth, inert lining for their metallic pans to resist corrosion.

Other shortcomings of the prior art include maintenance of the integrity of the seals after repeated use. Design of the sealing arrangement for a high pressure vessel such as an SCWO reactor is important not only to extend the life of the seals but also to prevent loss of hazardous materials, which would result in violations of safety regulations. Related art commonly uses a lid or head with a series of bolts which apply pressure on a seal such as an O-ring or a gasket made of gold or silver. These seals are exposed to the same corrosive environment which destroys the metallic parts within these reactors. Additionally, the bolted-down lids of these reactors are labor intensive to open and close, do not lend themselves to automation, and create considerable down time which all combine to increase overall operating costs.



Examples of other related an include U.S. Pat. No. 5,147,597 by Roofthooft et al. Roofthooft et al. disclose a prestablized chromium protective film which retards the build-up of radioactive contaminants on the inside surface of light water reactor systems. The film has a thickness of at least 500 Angstroms. Roofthooft et al. concentrate on reducing the formation of a radioactive isotope, Cobalt 59, and the corrosive products which are created by Cobalt 59 and are retained by steel piping during normal use.

Other related art includes U.S. Pat. No. 5,135,709 by Andresen et al. Andresen et al. disclose a method for reducing corrosion exposed to high-temperature water such as steam or water at about 150° C. or greater. The method concentrates on components formed from carbon steel, alloy steel, stainless steel, nickel-based alloys, and cobalt-based alloys. The method includes providing a reducing species, which can combine with the oxidizing species of the water, and forming a catalytic layer of a platinum group metal on the treated component. Andresen et al. do not specifically discuss high-temperature water containing hazardous wastes.

## SUMMARY OF THE INVENTION

Accordingly, an object of the present invention is to destroy hazardous and radioactive mixed waste.

Another object is to reduce corrosion and degradation of metallic parts and seals caused by high concentrations of halogens, acids, alkali metals, ammonia, heavy metals, and other hazardous wastes in a reactor used for supercritical water oxidation.

Yet another object of the invention is to resist thermal shock and interaction with radionuclides present in a reactor used for supercritical water oxidation.

A further object is to enable quick, automated opening and closing of a supercritical water oxidation reactor.

The present invention attains the foregoing and additional objects by providing a supercritical water oxidation reactor with a corrosion-resistant lining. The supercritical water oxidation (SCWO) reactor comprises a vessel with an interior surface, two cooling sections, a heat exchanger, an oxygenating section, and a trap. The interior surface of the vessel has a corrosion-resistant, artificial ceramic, diamond, or diamond-like coating. The artificial diamond coating is thin and crystal-like in structure. The cooling sections of the vessel are located on the outer ends of the vessel, and each section includes an inlet for cold water or other cooling fluid and an outlet. The heat exchanger, located between the two cooling sections, may also have inlets and outlets for entry and exit of hot fluids. The oxygenating section comprises a porous cylindrical baffle positioned within the vessel. The porous baffle transfers either oxygen or hydrogen peroxide which travels through the cylindrical baffle. The trap has valves for removal of the waste product. A seal is located at each end of the vessel.

In accordance with another aspect of the invention, the oxygenating section includes a shaft having a helical extension. The shaft has a corrosion-resistant, artificial diamond or diamond-like coating. The shaft is porous to permit the addition of oxygen or hydrogen peroxide to the hazardous waste. The helical extension increases the removal of solids from the waste. A seal is located at each end of the vessel.

In accordance with another aspect of the invention, the SCWO reactor comprises a vessel with an interior surface,

a heat exchanger, an oxygenating section, and a trap. The interior surface of the vessel has a corrosion-resistant lining which may be a ceramic or artificial diamond coating. The oxygenating section comprises a porous cylindrical baffle or a shaft positioned within the vessel. A seal is located at each end of the vessel.

Additional objects, advantages and novel features of the invention will be set forth in part in the description which follows, and in part will become apparent to those skilled in the art upon examination of the following or may be learned by practice of the invention. The objects and advantages of the invention may be realized and attained by means of the instrumentalities and combinations particularly pointed out in the appended claims.

## BRIEF DESCRIPTION OF THE DRAWINGS

The foregoing aspects and advantages of the present invention will be more fully understood from the following detailed description and reference to the appended drawings wherein:

FIG. **1** is a cross-sectional view of a Supercritical Water Oxidation (SCWO) reactor with a corrosion-resistant lining in accordance with the present invention;

FIG. **2** is a cross-sectional view of a SCWO reactor including a shaft with a helical extension in accordance with another aspect of the present invention;

FIG. **3** is a cross-sectional view of a SCWO reactor with a corrosion-resistant lining in accordance with another aspect of the present invention; and

FIG. **4** is a cross-sectional view of a seal assembly which includes a spring-loaded, graphite-reinforced polytetrafluorethylene seal.

## DETAILED DESCRIPTION OF THE INVENTION

Referring now to FIG. **1**, a supercritical water oxidation (SCWO) reactor **10** is shown having a corrosion-resistant lining **15** in accordance with the present invention. The SCWO reactor comprises a vessel **20**, a first cooling section **30**, a heat exchanger **40**, a second cooling section **50**, an oxygenating section **60**, and a trap **80**.

The vessel **20** has an inner surface which is coated with the corrosion-resistant lining **15**. The lining **15** is an artificial ceramic or diamond coating. The artificial diamond coating is thin and crystal-like in structure. This structure is capable of withstanding pressures up to 350 atm and temperatures up to 650° C. Additionally, this coating's structure resists chemically reacting with a mix of water, carbon dioxide, oxygen, ambient air, fluorides, halides, and salts. The diamond coating also resists thermal shock, interaction with radionuclides, and high concentrations of halogens, acids, alkali metals, ammonia, heavy metals, and other hazardous wastes.

The vessel **20** has an outer region **22** which includes an opening **24** where an aqueous solution of hazardous and radioactive mixed waste enters. A seal assembly **25** inserts between the end of the vessel **20** and a pump (not shown) for the SCWO system. The seal assembly **25** prevents leakage of hazardous waste between the interface of the pump and the vessel. The seal assembly **25** may include a conventional seal such as an O-ring or a gasket. Alternatively, the seal assembly includes a spring-loaded, graphite-reinforced polytetrafluorethylene seal as shown in FIG. **4**. The product polytetrafluorethylene is sold under the trademark TEFLON.

Referring again to FIG. **1**, a cooling section **30** circumferentially surrounds the vessel **20** at outer region **22**. The cooling section **30** includes an inlet **32** for supplying cold-water or any other cooling liquid to the section **30**. The liquid exits through outlet **34**. The cooling section **30** cools the aqueous mixed waste before it reaches inner region **26** and prevents conditions at the seal assembly **25** from reaching supercritical levels.

A heat exchanger **40** circumferentially surrounds the inner region **26** of the vessel. The heat exchanger **40** has an inlet **42** for supplying a hot fluid having a temperature in the range of 300° C. to 700° C. The hot fluid exits through outlets **44** and **46**. Alternatively, the heat exchanger **40** comprises an electrical heating coil wrapped around the exterior of vessel **20**. The heat exchanger **40** heats the aqueous mixed waste to supercritical values.

A second cooling section **50** circumferentially surrounds a second outer region **28** of the vessel. The second cooling section **50** includes an inlet **52** for supplying cold-water to the exchange and an outlet **54**. The cooling section **50** also has a pressure release valve **56** for regulating back pressure within the vessel **20**. The cooling section **50** cools the aqueous mixed waste below supercritical conditions before the waste reaches outlet **29** of the vessel. This cooling reduces the corrosive environment at the outlet **29** and thereby increases the life of seal assembly **70** located at the outlet.

Positioned within the vessel **20** is an oxygenating section **60**. Section **60** comprises a porous cylindrical baffle **62** having an inlet **64**, an outlet **66**, and a plurality of disbursing holes **68**. The cylindrical baffle **62** extends axially within the interior of the vessel. Inlet **64** receives an oxygenating agent such as oxygen or hydrogen peroxide. The agent travels within the baffle **62** and exits through the holes **68** into the aqueous mixed waste. The exterior surface of the baffle has an artificial diamond coating **65** along the inner surface of the vessel. The artificial diamond coating is thin and crystal-like in structure. The properties of coating **65** are similar to the lining **15**.

A seal assembly **70** is located at the outlet **29** of the vessel and the outlet **66** of the baffle. The seal assembly **70** preferably includes spring-loaded, graphite-reinforced polytetrafluorethylene seal. Alternatively, the seal assembly **70** may include an O-ring or gasket held into place by a bolted-down lid.

A trap **80** is also located at the outlet **29** of the vessel. The trap has two valves **82** and **84** for removing waste product separated from the aqueous mixture.

In accordance with another aspect of the invention, FIG. **2** illustrates a SCWO reactor **110** having a corrosion-resistant lining **115**. The SCWO reactor **110** comprises a vessel **120**, a first seal assembly **125**, a first cooling section **130**, a heat exchanger **140**, a second cooling section **150**, an oxygenating section **160**, a second seal assembly **170**, a rotating drive **175**, and a trap **180**.

The components of reactor **110** are substantially similar to the components of reactor **10**. The reactor **110**, however, has a different oxygenating section **160** and a rotating drive **175**.

The oxygenating section **160** comprises a porous shaft **162** positioned concentrically within the vessel **120**. The shaft **162** has a helical extension **163** which wraps axially about the shaft **162**. The shaft **162** extends axially within the interior of the vessel and connects to the rotating drive **175**. An inlet **164** receives an oxygenating agent such as oxygen or hydrogen peroxide. The oxygenating agent travels within the shaft **162** and exits through disbursing holes **168** into the

aqueous mixed waste. The exterior surface of the shaft **162**, including the helical extension **163**, has an artificial diamond coating **165** to resist corrosion. This coating is similar to the lining **115** covering the inner surface of the vessel **120** and the lining **15** covering the inner surface of vessel **20** in FIG. **1**. The coating is thin and crystal-like in structure.

Referring again to FIG. **2**, the rotating drive **175** rotates the shaft **162**. The helical path through which the aqueous hazardous mixed waste travels in vessel **120** aids in the removal of solids **200** from the aqueous mixed waste. In particular, the helical path increases the mass transfer coefficient of the mixed waste, which in turn increases the rate of reaction. This increase facilitates physical separation and reduces the reaction time.

In accordance with another aspect of the invention, FIG. **3** illustrates a SCWO reactor **210** having a corrosion-resistant lining **215**. The SCWO reactor **210** comprises a vessel **220**, a heat exchanger **240**, an oxygenating section **260**, and a trap **280**.

The vessel **220** has an inner surface which is coated with a corrosion-resistant lining **215**. The lining **215** is an artificial ceramic or diamond coating. The artificial diamond coating is thin and crystal-like in structure. The properties and structure of lining **215** are similar to lining **15**.

The vessel **220** has an opening **224** where an aqueous solution of hazardous and radioactive mixed waste enters. A seal assembly **225** inserts between the end of the vessel **220** and a pump (not shown) for the SCWO system. The seal assembly **225** prevents leakage of hazardous waste between the interface of the pump and the vessel. The seal assembly **225** may include a conventional seal such as an O-ring or a gasket or may include a spring-loaded, graphite-reinforced polytetrafluorethylene seal as shown in FIG. **4**.

Referring again to FIG. **3**, the heat exchanger **240** circumferentially surrounds the vessel **220**. The heat exchanger has an inlet **242** for supplying hot fluid having a temperature in a range of 300° C. to 700° C. The hot fluid exits through outlets **244** and **246**. Alteratively, the heat exchanger **240** comprises an electrical heating coil wrapped around the exterior of vessel **220**. The heat exchanger **240** heats the aqueous mixed waste to supercritical values.

Positioned within the vessel **220** is an oxygenating section **260**. Section **260** comprises a porous cylindrical baffle **262** having an inlet **264**, and a plurality of disbursing holes **268**. The cylindrical baffle **262** extends axially within the interior of the vessel. Inlet **264** receives an oxygenating agent such as oxygen or hydrogen peroxide. The agent travels within the baffle **262** and exits through the holes **268** into the aqueous mixed waste. The exterior surface of the baffle has an artificial diamond coating **265** similar to the lining **215** along the inner surface of the vessel. The coating **265** is thin and crystal-like in structure. The properties of coating **265** are similar to the lining **15** of FIG. **1**.

Referring again to FIG. **3**, a seal assembly **270** is located near an outlet **229** of the vessel. The seal assembly **270** preferably includes a spring-loaded, graphite-reinforced polytetrafluorethylene seal. Alternatively, the seal assembly **270** may include an O-ring or gasket held into place by a bolted down lid.

A trap **280** is also located at the outlet **229** of the vessel. The trap has two valves **282** and **284** for removing waste product separated from the aqueous mixture.

FIG. **4** illustrates a seal assembly in accordance with the present invention which includes a spring-loaded, graphite-reinforced polytetrafluorethylene seal **300**. This type of seal provides an effective sealing method requiring minimal force and is practically self-sealing. The seal consists of a graphite reinforced body **310** with a spring **315** in the middle. The spring **315** pushes the two sides of the seal outside. One side of the seal touches the body of a vessel **320** and the other side of the seal touches a cap **330**. When the pressure inside the vessel increases, it acts against the seal and pushes the lips even further towards the wall. Little force is necessary to maintain a seal.

The seal assembly shown in FIG. **4** eliminates the need for bolted-down lids used in a conventional sealing design and enables quick, automated opening and closing of the vessel. Automated opening and closing is achieved by threading both the cap **330** and the vessel body **320** and leaving enough stock to take any axial stresses. A simple motor mechanism can feed the cap into the vessel. This automation provides considerable amount of safety to the operator.

The novel features of the present invention include the artificial diamond or diamond-like coating along the inner surface of the vessel and the exterior surface of the cylindrical baffle or the porous shaft of the SCWO reactor. Other novel features include cooling sections near the outlets of the vessel and spring-loaded, graphite-reinforced polytetrafluorethylene seals.

Advantages of the present invention include reduced corrosion and degradation of the seals and metallic parts located within a SCWO reactor and increased resistance to thermal shock and to interaction with radionuclides. Other advantages include quick, automated opening and closing of the SCWO reactor and increased resistance to high concentrations of halogens, acids, alkali metals, ammonia, and heavy metals.

Although the invention has been described relative to a specific embodiment thereof, numerous variations and modifications will be readily apparent to those skilled in the art in the light of the above teachings. It is therefore to be understood that, within the scope of the appended claims, the invention may be practiced other than as specifically described.

What is claimed as new and desired to be secured by Letters Patent of the United States is:

**1**. A supercritical water oxidation reactor, comprising:

a vessel with an interior surface, the interior surface having a corrosion-resistant, artificial diamond coating;

a cooling section, located at an inlet of said vessel, said first cooling section surrounding an outer region of said vessel;

a heat exchanger, located contiguously to said first cooling section, said heat exchanger surrounding an inner region of said vessel;

a second cooling section, located at an outlet of said vessel, said second cooling section surrounding a second outer region of said vessel;

a porous cylindrical baffle, positioned within said cylindrical vessel, for transferring an oxygenating agent; and

a trap, located at the outlet of said vessel, for removing waste products.

**2**. A supercritical water oxidation reactor as claimed in claim **1** further comprising a spring-loaded, graphite-reinforced polytetrafluorethylene seal located at each end of said vessel.

**3**. A supercritical water oxidation reactor as claimed in claim **1** wherein the exterior surface of said cylindrical baffle has a thin, artificial diamond-like coating.

**4**. A supercritical water oxidation reactor as claimed in claim **1** wherein the corrosion-resistant, artificial diamond

coating has a thin, crystal-like structure.

**5**. A supercritical water oxidation reactor comprising:

a vessel with an interior surface, the interior surface having a corrosion-resistant, artificial diamond coating;

a first cooling section, located at an inlet of said cylindrical vessel, said first cooling section surrounding an outer region of the said vessel;

a heat exchanger, located contiguously to said first cooling section, said heat exchanger surrounding an inner region of said vessel;

a second cooling section, located at an outlet of said vessel, said second cooling section surrounding an outer region of said vessel;

a porous shaft having a helical extension, said shaft being positioned within said vessel; and

a trap, located at the outlet of said vessel, for removing waste products.

**6**. A supercritical water oxidation reactor as claimed in claim **5** further comprising a spring-loaded, graphite reinforced polytetrafluorethylene seal located at each outlet end of said vessel.

**7**. A supercritical water oxidation reactor as claimed in claim **4** wherein the exterior surface of said shaft has a thin, artificial diamond-like coating.

**8**. A supercritical water oxidation reactor as claimed in claim **5** wherein the corrosion-resistant, artificial diamond coating has a thin, crystal-like structure.

* * * * *