| REQUEST FOR QUOTATIONS *(THIS IS NOT AN ORDER)* | THIS RFQ [X] IS [ ] IS NOT A SMALL BUSINESS SET-ASIDE | PAGE 1 OF PAGES 29 |
|---|---|---|

| 1. REQUEST NO. | 2. DATE ISSUED | 3. REQUISITION/PURCHASE REQUEST NO. | 4. CERT. FOR NAT. DEF. UNDER BDSA REG. 2 AND/OR DMS REG. 1 | RATING |
|---|---|---|---|---|
| N00174-06-Q-0073 | 14-Jun-2006 | | | DO-C9E |

5a. ISSUED BY
NAVSEA INDIAN HEAD
101 STRAUSS AVE. BLDG. 1558
ATTN: CAROLYN ANDERSON C12C
CAROLYN.L.ANDERSON@NAVY.MIL
INDIAN HEAD MD 20640-5035

6. DELIVER BY *(Date)*
**SEE SCHEDULE**

7. DELIVERY
[ X ] FOB DESTINATION [ ] OTHER *(See Schedule)*

5b. FOR INFORMATION CALL: *(Name and Telephone no.) (No collect calls)*
CAROLYN ANDERSON 301/744-6545

8. TO: NAME AND ADDRESS, INCLUDING ZIP CODE

9. DESTINATION *(Consignee and address, including ZIP Code)*
NAVSEA INDIAN HEAD
RECEIVING OFFICER BLDG 116
101 STRAUSS AVE.
INDIAN HEAD MD 20640-5035
TEL: 301/744-4861 FAX:

10. PLEASE FURNISH QUOTATIONS TO THE ISSUING OFFICE IN BLOCK 5a ON OR BEFORE CLOSE OF BUSINESS:
*(Date)* 23-Jun-2006

**IMPORTANT:** This is a request for information, and quotations furnished are not offers. If you are unable to quote, please so indicate on this form and return it to the address in Block 5a. This request does not commit the Government to pay any costs incurred in the preparation of the submission of this quotation or to contract for supplies or services. Supplies are of domestic origin unless otherwise indicated by quoter. Any representations and/or certifications attached to this Request for Quotations must be completed by the quoter.

11. SCHEDULE *(Include applicable Federal, State, and local taxes)*

| ITEM NO. (a) | SUPPLIES/ SERVICES (b) | QUANTITY (c) | UNIT (d) | UNIT PRICE (e) | AMOUNT (f) |
|---|---|---|---|---|---|
| | **SEE SCHEDULE** | | | | |

| 12. DISCOUNT FOR PROMPT PAYMENT | a. 10 CALENDAR DAYS % | b. 20 CALENDAR DAYS % | c. 30 CALENDAR DAYS % | d. CALENDAR DAYS No. % |
|---|---|---|---|---|

**NOTE: Additional provisions and representations [ ] are [ ] are not attached.**

| 13. NAME AND ADDRESS OF QUOTER *(Street, City, County, State, and ZIP Code)* | 14. SIGNATURE OF PERSON AUTHORIZED TO SIGN QUOTATION | 15. DATE OF QUOTATION |
|---|---|---|
| | 16. NAME AND TITLE OF SIGNER *(Type or print)* | TELEPHONE NO. *(Include area code)* |

Section B - Supplies or Services and Prices

| ITEM NO | SUPPLIES/SERVICES | QUANTITY | UNIT | UNIT PRICE | AMOUNT |
|---|---|---|---|---|---|
| 0001 | **BASE YEAR**<br>FIRING PIN<br>IAW DRAWING NUMBER 944AS207 | 100 | Each | | |

| STEPLADDER NAME | ITEM NO | FROM QUANTITY | TO QUANTITY | UNIT PRICE |
|---|---|---|---|---|
| **OPTION I**<br>FIRING PIN | 0002 | 1.00<br>51.00<br>151.00 | 50.00<br>150.00<br>250.00 | |

| STEPLADDER NAME | ITEM NO | FROM QUANTITY | TO QUANTITY | UNIT PRICE |
|---|---|---|---|---|
| **OPTION II**<br>FIRING PIN | 0003 | 1.00<br>51.00<br>151.00 | 50.00<br>150.00<br>250.00 | |

| STEPLADDER NAME | ITEM NO | FROM QUANTITY | TO QUANTITY | UNIT PRICE |
|---|---|---|---|---|
| **OPTION III**<br>FIRING PIN | 0004 | 1.00<br>51.00<br>151.00 | 50.00<br>150.00<br>250.00 | |

| STEPLADDER NAME | ITEM NO | FROM QUANTITY | TO QUANTITY | UNIT PRICE |
|---|---|---|---|---|
| **OPTION IV**<br>FIRING PIN | 0005 | 1.00<br>51.00<br>151.00 | 50.00<br>150.00<br>250.00 | |

| ITEM NO | SUPPLIES/SERVICES | QUANTITY | UNIT | UNIT PRICE | AMOUNT |
|---|---|---|---|---|---|
| 0006 | **BASE YEAR**<br>PRIMER PLATE<br>IAW DRAWING NUMBER SK5130E-MK82-9017 | 50 | Each | | |

| STEPLADDER NAME | ITEM NO | FROM QUANTITY | TO QUANTITY | UNIT PRICE |
|---|---|---|---|---|
| **OPTION I** | 0007 | 1.00 | 50.00 | |
| PRIMER PLATE | | 51.00 | 150.00 | |
| | | 151.00 | 250.00 | |

| STEPLADDER NAME | ITEM NO | FROM QUANTITY | TO QUANTITY | UNIT PRICE |
|---|---|---|---|---|
| **OPTION II** | 0008 | 1.00 | 50.00 | |
| PRIMER PLATE | | 51.00 | 150.00 | |
| | | 151.00 | 250.00 | |

| STEPLADDER NAME | ITEM NO | FROM QUANTITY | TO QUANTITY | UNIT PRICE |
|---|---|---|---|---|
| **OPTION III** | 0009 | 1.00 | 50.00 | |
| PRIMER PLATE | | 51.00 | 150.00 | |
| | | 151.00 | 250.00 | |

| STEPLADDER NAME | ITEM NO | FROM QUANTITY | TO QUANTITY | UNIT PRICE |
|---|---|---|---|---|
| **OPTION IV** | 0010 | 1.00 | 50.00 | |
| PRIMER PLATE | | 51.00 | 150.00 | |
| | | 151.00 | 250.00 | |

| ITEM NO | SUPPLIES/SERVICES | QUANTITY | UNIT | UNIT PRICE | AMOUNT |
|---|---|---|---|---|---|
| 0011 | **BASE YEAR**<br>IGNITER CUP<br>IAW DRAWING NUMBER 944AS216 | 50 | Each | | |

| STEPLADDER NAME | ITEM NO | FROM QUANTITY | TO QUANTITY | UNIT PRICE |
|---|---|---|---|---|
| **OPTION I** | 0012 | 1.00 | 50.00 | |
| IGNITER CUP | | 51.00 | 150.00 | |
| | | 151.00 | 250.00 | |

| STEPLADDER NAME | ITEM NO | FROM QUANTITY | TO QUANTITY | UNIT PRICE |
|---|---|---|---|---|
| **OPTION II** | 0013 | 1.00 | 50.00 | |
| IGNITER CUP | | 51.00 | 150.00 | |
| | | 151.00 | 250.00 | |

| STEPLADDER NAME | ITEM NO | FROM QUANTITY | TO QUANTITY | UNIT PRICE |
|---|---|---|---|---|
| **OPTION III** | 0014 | 1.00 | 50.00 | |
| IGNITER CUP | | 51.00 | 150.00 | |
| | | 151.00 | 250.00 | |

| STEPLADDER NAME | ITEM NO | FROM QUANTITY | TO QUANTITY | UNIT PRICE |
|---|---|---|---|---|
| **OPTION IV** | 0015 | 1.00 | 50.00 | |
| IGNITER CUP | | 51.00 | 150.00 | |
| | | 151.00 | 250.00 | |

| ITEM NO | SUPPLIES/SERVICES | QUANTITY | UNIT | UNIT PRICE | AMOUNT |
|---|---|---|---|---|---|
| 0016 | **BASE YEAR** | 50 | Each | | |
| | CLOSURE DISK | | | | |
| | PER SKT SK5130E-MK82-9020 | | | | |

| STEPLADDER NAME | ITEM NO | FROM QUANTITY | TO QUANTITY | UNIT PRICE |
|---|---|---|---|---|
| **OPTION I** | 0017 | 1.00 | 50.00 | |
| CLOSURE DISK | | 51.00 | 150.00 | |
| | | 151.00 | 250.00 | |

| STEPLADDER NAME | ITEM NO | FROM QUANTITY | TO QUANTITY | UNIT PRICE |
|---|---|---|---|---|
| **OPTION II** | 0018 | 1.00 | 50.00 | |
| CLOSURE DISK | | 51.00 | 150.00 | |
| | | 151.00 | 250.00 | |

| STEPLADDER NAME | ITEM NO | FROM QUANTITY | TO QUANTITY | UNIT PRICE |
|---|---|---|---|---|
| **OPTION III** | 0019 | 1.00 | 50.00 | |
| CLOSURE DISK | | 51.00 | 150.00 | |
| | | 151.00 | 250.00 | |

| STEPLADDER NAME | ITEM NO | FROM QUANTITY | TO QUANTITY | UNIT PRICE |
|---|---|---|---|---|
| **OPTION IV** | 0020 | 1.00 | 50.00 | |
| CLOSURE DISK | | 51.00 | 150.00 | |
| | | 151.00 | 250.00 | |

| ITEM NO | SUPPLIES/SERVICES | QUANTITY | UNIT | UNIT PRICE | AMOUNT |
|---|---|---|---|---|---|
| 0021 | **BASE YEAR** | 100 | Each | | |
| | FIRING PIN STOP | | | | |
| | IAW DRAWING NUMBER SK5130E-MK82-9037 | | | | |

| STEPLADDER NAME | ITEM NO | FROM QUANTITY | TO QUANTITY | UNIT PRICE |
|---|---|---|---|---|
| **OPTION I** | 0022 | 1.00 | 50.00 | |
| FIRING PIN STOP | | 51.00 | 150.00 | |
| | | 151.00 | 250.00 | |

| STEPLADDER NAME | ITEM NO | FROM QUANTITY | TO QUANTITY | UNIT PRICE |
|---|---|---|---|---|
| **OPTION II** | 0023 | 1.00 | 50.00 | |

| | | | | |
|---|---|---|---|---|
| FIRING PIN STOP | | 51.00 | 150.00 | |
| | | 151.00 | 250.00 | |

| STEPLADDER NAME | ITEM NO | FROM QUANTITY | TO QUANTITY | UNIT PRICE |
|---|---|---|---|---|
| **OPTION III** | 0024 | 1.00 | 50.00 | |
| FIRING PIN STOP | | 51.00 | 150.00 | |
| | | 151.00 | 250.00 | |

| STEPLADDER NAME | ITEM NO | FROM QUANTITY | TO QUANTITY | UNIT PRICE |
|---|---|---|---|---|
| **OPTION IV** | 0025 | 1.00 | 50.00 | |
| FIRING PIN STOP | | 51.00 | 150.00 | |
| | | 151.00 | 250.00 | |

| ITEM NO | SUPPLIES/SERVICES | QUANTITY | UNIT | UNIT PRICE | AMOUNT |
|---|---|---|---|---|---|
| 0026 | **BASE YEAR** | 100 | Each | | |
| | NOZZLE INSERT | | | | |
| | IAW DRAWING NUMBER 944AS109 | | | | |

| STEPLADDER NAME | ITEM NO | FROM QUANTITY | TO QUANTITY | UNIT PRICE |
|---|---|---|---|---|
| **OPTION I** | 0027 | 1.00 | 50.00 | |
| NOZZLE INSERT | | 51.00 | 150.00 | |
| | | 151.00 | 250.00 | |

| STEPLADDER NAME | ITEM NO | FROM QUANTITY | TO QUANTITY | UNIT PRICE |
|---|---|---|---|---|
| **OPTION II** | 0028 | 1.00 | 50.00 | |
| NOZZLE INSERT | | 51.00 | 150.00 | |
| | | 151.00 | 250.00 | |

| STEPLADDER NAME | ITEM NO | FROM QUANTITY | TO QUANTITY | UNIT PRICE |
|---|---|---|---|---|

| | | | |
|---|---|---|---|
| **OPTION III** | 0029 | 1.00 | 50.00 |
| NOZZLE INSERT | | 51.00 | 150.00 |
| | | 151.00 | 250.00 |

| STEPLADDER NAME | ITEM NO | FROM QUANTITY | TO QUANTITY | UNIT PRICE |
|---|---|---|---|---|
| **OPTION IV** | 0030 | 1.00 | 50.00 | |
| NOZZLE INSERT | | 51.00 | 150.00 | |
| | | 151.00 | 250.00 | |

| ITEM NO | SUPPLIES/SERVICES | QUANTITY | UNIT | UNIT PRICE | AMOUNT |
|---|---|---|---|---|---|
| 0031 | **BASE YEAR** | 150 | Each | | |
| | ID LABEL MK82 | | | | |
| | IAW DRAWING NUMBER 4904217-8 | | | | |

| STEPLADDER NAME | ITEM NO | FROM QUANTITY | TO QUANTITY | UNIT PRICE |
|---|---|---|---|---|
| **OPTION I** | 0032 | 1.00 | 50.00 | |
| ID LABEL MK 82 | | 51.00 | 150.00 | |
| | | 151.00 | 250.00 | |

| STEPLADDER NAME | ITEM NO | FROM QUANTITY | TO QUANTITY | UNIT PRICE |
|---|---|---|---|---|
| **OPTION II** | 0033 | 1.00 | 50.00 | |
| ID LABEL MK82 | | 51.00 | 150.00 | |
| | | 151.00 | 250.00 | |

| STEPLADDER NAME | ITEM NO | FROM QUANTITY | TO QUANTITY | UNIT PRICE |
|---|---|---|---|---|
| **OPTION III** | 0034 | 1.00 | 50.00 | |
| ID LABEL MK82 | | 51.00 | 150.00 | |
| | | 151.00 | 250.00 | |

| STEPLADDER NAME | ITEM NO | FROM QUANTITY | TO QUANTITY | UNIT PRICE |
|---|---|---|---|---|
| **OPTION IV** | 0035 | 1.00 | 50.00 | |
| ID LABEL MK82 | | 51.00 | 150.00 | |
| | | 151.00 | 250.00 | |

| ITEM NO | SUPPLIES/SERVICES | QUANTITY | UNIT | UNIT PRICE | AMOUNT |
|---|---|---|---|---|---|
| 0036 | **BASE YEAR** | 250 | Each | | |
| | ORING | | | | |
| | IAW DRAWING NUMBER 944AS210 | | | | |

| STEPLADDER NAME | ITEM NO | FROM QUANTITY | TO QUANTITY | UNIT PRICE |
|---|---|---|---|---|
| **OPTION I** | 0037 | 1.00 | 50.00 | |
| ORING | | 51.00 | 150.00 | |
| | | 151.00 | 250.00 | |

| STEPLADDER NAME | ITEM NO | FROM QUANTITY | TO QUANTITY | UNIT PRICE |
|---|---|---|---|---|
| **OPTION II** | 0038 | 1.00 | 50.00 | |
| ORING | | 51.00 | 150.00 | |
| | | 151.00 | 250.00 | |

| STEPLADDER NAME | ITEM NO | FROM QUANTITY | TO QUANTITY | UNIT PRICE |
|---|---|---|---|---|
| **OPTION III** | 0039 | 1.00 | 50.00 | |
| ORING | | 51.00 | 150.00 | |
| | | 151.00 | 250.00 | |

| STEPLADDER NAME | ITEM NO | FROM QUANTITY | TO QUANTITY | UNIT PRICE |
|---|---|---|---|---|

| | | | |
|---|---|---|---|
| **OPTION IV** | 0040 | 1.00 | 50.00 |
| ORING | | 51.00 | 150.00 |
| | | 151.00 | 250.00 |

| ITEM NO | SUPPLIES/SERVICES | QUANTITY | UNIT | UNIT PRICE | AMOUNT |
|---|---|---|---|---|---|
| 0041 | **BASE YEAR** | 250 | Each | | |
| | ORING | | | | |
| | IAW DRAWING NUMBER 944AS210 | | | | |

| STEPLADDER NAME | ITEM NO | FROM QUANTITY | TO QUANTITY | UNIT PRICE |
|---|---|---|---|---|
| **OPTION I** | 0042 | 1.00 | 50.00 | |
| ORING | | 51.00 | 150.00 | |
| | | 151.00 | 250.00 | |

| STEPLADDER NAME | ITEM NO | FROM QUANTITY | TO QUANTITY | UNIT PRICE |
|---|---|---|---|---|
| **OPTION II** | 0043 | 1.00 | 50.00 | |
| ORING | | 51.00 | 150.00 | |
| | | 151.00 | 250.00 | |

| STEPLADDER NAME | ITEM NO | FROM QUANTITY | TO QUANTITY | UNIT PRICE |
|---|---|---|---|---|
| **OPTION III** | 0044 | 1.00 | 50.00 | |
| ORING | | 51.00 | 150.00 | |
| | | 151.00 | 250.00 | |

| STEPLADDER NAME | ITEM NO | FROM QUANTITY | TO QUANTITY | UNIT PRICE |
|---|---|---|---|---|
| **OPTION IV** | 0045 | 1.00 | 50.00 | |
| ORING | | 51.00 | 150.00 | |
| | | 151.00 | 250.00 | |

| ITEM NO | SUPPLIES/SERVICES | QUANTITY | UNIT | UNIT PRICE | AMOUNT |
|---|---|---|---|---|---|
| 0046 | **BASE YEAR**<br>SHEAR PIN<br>IAW DRAWING NUMBER 736AS159 | 500 | Each | | |

| STEPLADDER NAME | ITEM NO | FROM QUANTITY | TO QUANTITY | UNIT PRICE |
|---|---|---|---|---|
| **OPTION I**<br>SHEAR PIN | 0047 | 1.00<br>51.00<br>151.00 | 50.00<br>150.00<br>250.00 | |

| STEPLADDER NAME | ITEM NO | FROM QUANTITY | TO QUANTITY | UNIT PRICE |
|---|---|---|---|---|
| **OPTION II**<br>SHEAR PIN | 0048 | 1.00<br>51.00<br>151.00 | 50.00<br>150.00<br>250.00 | |

| STEPLADDER NAME | ITEM NO | FROM QUANTITY | TO QUANTITY | UNIT PRICE |
|---|---|---|---|---|
| **OPTION III**<br>SHEAR PIN | 0049 | 1.00<br>51.00<br>151.00 | 50.00<br>150.00<br>250.00 | |

| STEPLADDER NAME | ITEM NO | FROM QUANTITY | TO QUANTITY | UNIT PRICE |
|---|---|---|---|---|
| **OPTION IV**<br>SHEAR PIN | 0050 | 1.00<br>51.00<br>151.00 | 50.00<br>150.00<br>250.00 | |

## STATEMENT OF WORK

1. When required by drawing, parts shall be cadmium plated to the requirements of QQ-P-416, Revision F, Amendment 3 or anodized to MIL-A-8625 Revision F.

2. Coverage: There shall be no rack marks, air bubbles, pin holes nor any other bare areas, **except those specifically denoted as such by the contract/purchase order/or bankcard order**. All internal and external threads shall have at least a presence of plating (verifable by visual examination) and a maximum coverage thickness of .0004 inches. All surfaces not controlled for plating thickness by the contract/purchase order/or bankcard order shall have presence of plating (verifiable by visual inspection)

and a maximum coverage thickness of .0008 inches. These requirements shall be met regardless of part configuration, contour, part size, and any in-process controls needed to perform the plating. (This includes all internal and external surfaces.)

**3.** Adhesion: Plating shall show no indication of separation from the base metal when tested in accordance with ASTM D3359-97, and shall meet adhesion requirements of the governing plating specification.

**4.** Embrittlement Relief: All cadmium plated parts, regardless of hardness, must be baked, after plating, but prior to chromate finish, as specified below. Any parts exceeding R/C 36 (160 ksi) in hardness, shall **also** be subject to the following baking requirements **between** stripping and replating.

Time between Plating and Baking: shall not exceed 4 hours
Temperature for Baking: 375 degrees F +/-25 degrees F
Time for Baking: 23 hours minimum

5. Corrosion and Hydrogen Embrittlement Test: Although the vendor is not required to perform this test, the government reserves the right to perform the test at any time, at government expense.

**Special Packing Instructions for Shear Pin, O-ring, Closure Disk, MK 82 ID Label and Seal O-ring.**

A. Inserting a desciccant bag MIL-D-3464, Type I or II of appropriate size, with each component, into any poly-bag with a minimum thickness .002 inch shall provide moisture protection. Each unit may either be heat-sealed, taped or zip locked.

B. After completion of the above requirements the parts are to be bulk packaged for shipment to the Indian Head Division, Naval Surface Warfare Center.

Note: The shipping containers must be legibly marked on two surfaces with contract number, part name, part number and quantity.

**Special Packing Instructions for Firing Pin, Primer Plate, Igniter Cup, Firing Pin Stop, Nozzle Insert**

A. Primary physical protection from shipping and handling damage shall be provided by covering each component with a web-type sleeve (reference CAPLUG SW series or equivalent) of appropriate size as to ensure protection from physical damage.

B. Moisture protection shall be provided by inserting a desciccant bag MIL-D-3464, Type I or II of appropriate size, with each component, into any poly-bag with a minimum thickness .002 inch. Each unit may either be heat sealed, taped or ziplocked.

Note: The shipping containers must be legibly marked on two surfaces with the contract number, part name, part number, and quantity.

CLAUSES INCORPORATED BY FULL TEXT

52.204-3 TAXPAYER IDENTIFICATION (OCT 1998)

(a) Definitions.

Common parent, as used in this provision, means that corporate entity that owns or controls an affiliated group of corporations that files its Federal income tax returns on a consolidated basis, and of which the offeror is a member.

Taxpayer Identification Number (TIN), as used in this provision, means the number required by the Internal Revenue Service (IRS) to be used by the offeror in reporting income tax and other returns. The TIN may be either a Social Security Number or an Employer Identification Number.

(b) All offerors must submit the information required in paragraphs (d) through (f) of this provision to comply with debt collection requirements of 31 U.S.C. 7701(c) and 3325(d), reporting requirements of 26 U.S.C. 6041, 6041A, and 6050M, and implementing regulations issued by the IRS. If the resulting contract is subject to the payment reporting requirements described in Federal Acquisition Regulation (FAR) 4.904, the failure or refusal by the offeror to furnish the information may result in a 31 percent reduction of payments otherwise due under the contract.

(c) The TIN may be used by the Government to collect and report on any delinquent amounts arising out of the offeror's relationship with the Government (31 U.S.C. 7701(c)(3)). If the resulting contract is subject to the payment reporting requirements described in FAR 4.904, the TIN provided hereunder may be matched with IRS records to verify the accuracy of the offeror's TIN.

(d) Taxpayer Identification Number (TIN).

___ TIN:.----------

___ TIN has been applied for.

___ TIN is not required because:

___ Offeror is a nonresident alien, foreign corporation, or foreign partnership that does not have income effectively connected with the conduct of a trade or business in the United States and does not have an office or place of business or a fiscal paying agent in the United States;

___ Offeror is an agency or instrumentality of a foreign government;

___ Offeror is an agency or instrumentality of the Federal Government.

(e) Type of organization.

___ Sole proprietorship;

___ Partnership;

___ Corporate entity (not tax-exempt);

___ Corporate entity (tax-exempt);

___ Government entity (Federal, State, or local);

___ Foreign government;

___ International organization per 26 CFR 1.6049-4;

___ Other----------

(f) Common parent.

___ Offeror is not owned or controlled by a common parent as defined in paragraph (a) of this provision.

___ Name and TIN of common parent:

Name----------

TIN----------

(End of provision)

52.213-4 TERMS AND CONDITIONS--SIMPLIFIED ACQUISITIONS (OTHER THAN COMMERCIAL ITEMS) (FEB 2006)

(a) The Contractor shall comply with the following Federal Acquisition Regulation (FAR) clauses that are incorporated by reference:

(1) The clauses listed below implement provisions of law or Executive order:

(i) 52.222-3, Convict Labor (June 2003) (E.O. 11755).

(ii) 52.222-21, Prohibition of Segregated Facilities (Feb 1999) (E.O. 11246).

(iii) 52.222-26, Equal Opportunity (Apr 2002) (E.O. 11246).

(iv) 52.225-13, Restrictions on Certain Foreign Purchases (FEB 2006) (E.o.s, proclamations, and statutes administered by the Office of Foreign Assets Control of the Department of the Treasury).

(v) 52.233-3, Protest After Award (Aug 1996) (31 U.S.C. 3553).

(vi) 52.233-4, Applicable Law for Breach of Contract Claim (OCT 2004) (Pub. L. 108-77, 108-78).

(2) Listed below are additional clauses that apply:

(i) 52.232-1, Payments (Apr 1984).

(ii) 52.232-8, Discounts for Prompt Payment (Feb 2002).

(iii) 52.232-11, Extras (Apr 1984).

(iv) 52.232-25, Prompt Payment (Oct 2003).

(v) 52.233-1, Disputes (Jul 2002).

(vi) 52.244-6, Subcontracts for Commercial Items (FEB 2006).

(vii) 52.253-1, Computer Generated Forms (Jan 1991).

(b) The Contractor shall comply with the following FAR clauses, incorporated by reference, unless the circumstances do not apply:

(1) The clauses listed below implement provisions of law or Executive order:

(i) 52.222-19, Child Labor--Cooperation with Authorities and Remedies (JAN 2005) (E.O. 13126). (Applies to contracts for supplies exceeding the micro-purchase threshold.)

(ii) 52.222-20, Walsh-Healey Public Contracts Act (DEC 1996) (41 U.S.C. 35-45) (Applies to supply contracts over $10,000 in the United States, Puerto Rico, or the U.S. Virgin Islands).

(iii) 52.222-35, Equal Opportunity for Special Disabled Veterans, Veterans of the Vietnam Era, and Other Eligible Veterans (DEC 2001) (38 U.S.C. 4212) (Applies to contracts of $25,000 or more).

(iv) 52.222-36, Affirmative Action for Workers with Disabilities (JUN 1998) (29 U.S.C. 793) (Applies to contracts over $10,000, unless the work is to be performed outside the United States by employees recruited outside the United States.) (For purposes of this clause, United States includes the 50 States, the District of Columbia, Puerto Rico, the Northern Mariana Islands, American Samoa, Guam, the U.S. Virgin Islands, and Wake Island.).

(v) 52.222-37, Employment Reports on Special Disabled Veterans, Veterans of the Vietnam Era, and Other Eligible Veterans (DEC 2001) (38 U.S.C. 4212) (Applies to contracts over $25,000).

(vi) 52.222-41, Service Contract Act, As Amended (JUL 2005) (41 U.S.C. 351, et seq.) (Applies to service contracts over $2,500 that are subject to the Service Contract Act and will be performed in the United States, District of Columbia, Puerto Rico, the Northern Mariana Islands, American Samoa, Guam, the U.S. Virgin Islands, Johnston Island, Wake Island, or the outer continental shelf lands.).

(vii) 52.223-5, Pollution Prevention and Right-to-Know Information (Aug 2003) (E.O. 13148) (Applies to services performed on Federal facilities).

(viii) 52.225-1, Buy American Act--Supplies (June 2003) (41 U.S.C. 10a-10d) (Applies to contracts for supplies, and to contracts for services involving the furnishing of supplies, for use in the United States or its outlying areas, if the value of the supply contract or supply portion of a service contract exceeds the micro-purchase threshold and the **acquisition**--

(A) Is set aside for small business concerns; or

(B) Cannot be set aside for small business concerns (see 19.502-2), and does not exceed $25,000.)

(ix) 52.232-33, Payment by Electronic Funds Transfer--Central Contractor Registration (May 1999). (Applies when the payment will be made by electronic funds transfer (EFT) and the payment office uses the Central Contractor Registration (CCR) database as its source of EFT information.)

(x) 52.232-34, Payment by Electronic Funds Transfer--Other than Central Contractor Registration (Oct 2003). (Applies when the payment will be made by EFT and the payment office does not use the CCR database as its source of EFT information.)

(xi) 52.247-64, Preference for Privately Owned U.S.-Flag Commercial Vessels (FEB 2006) (46 U.S.C. Appx 1241). (Applies to supplies transported by ocean vessels (except for the types of subcontracts listed at 47.504(d).)

(2) Listed below are additional clauses that may apply:

(i) 52.209-6, Protecting the Government's Interest When Subcontracting with Contractors Debarred, Suspended, or Proposed for Debarment (JAN 2005) (Applies to contracts over $25,000).

(ii) 52.211-17, Delivery of Excess Quantities (SEPT 1989) (Applies to fixed-price supplies).

(iii) 52.247-29, F.o.b. Origin (FEB 2006) (Applies to supplies if delivery is f.o.b. origin).

(iv) 52.247-34, F.o.b. Destination (NOV 1991) (Applies to supplies if delivery is f.o.b. destination).

(c) FAR 52.252-2, Clauses Incorporated by Reference (FEB 1998). This contract incorporates one or more clauses by reference, with the same force and effect as if they were given in full text. Upon request, the Contracting Officer will make their full text available. Also, the full text of a clause may be accessed electronically at this/these address(es): www.arnet.gov/far

(d) Inspection/Acceptance. The Contractor shall tender for acceptance only those items that conform to the requirements of this contract. The Government reserves the right to inspect or test any supplies or services that have been tendered for acceptance. The Government may require repair or replacement of nonconforming supplies or reperformance of nonconforming services at no increase in contract price. The Government must exercise its postacceptance rights--

(1) Within a reasonable period of time after the defect was discovered or should have been discovered; and

(2) Before any substantial change occurs in the condition of the item, unless the change is due to the defect in the item.

(e) Excusable delays. The Contractor shall be liable for default unless nonperformance is caused by an occurrence beyond the reasonable control of the Contractor and without its fault or negligence, such as acts of God or the public enemy, acts of the Government in either its sovereign or contractual capacity, fires, floods, epidemics, quarantine restrictions, strikes, unusually severe weather, and delays of common carriers. The Contractor shall notify the Contracting Officer in writing as soon as it is reasonably possible after the commencement of any excusable delay, setting forth the full particulars in connection therewith, shall remedy such occurrence with all reasonable dispatch, and shall promptly give written notice to the Contracting Officer of the cessation of such occurrence.

(f) Termination for the Government's convenience. The Government reserves the right to terminate this contract, or any part hereof, for its sole convenience. In the event of such termination, the Contractor shall immediately stop all work hereunder and shall immediately cause any and all of its suppliers and subcontractors to cease work. Subject to the terms of this contract, the Contractor shall be paid a percentage of the contract price reflecting the percentage of the work performed prior to the notice of termination, plus reasonable charges that the Contractor can demonstrate to the satisfaction of the Government, using its standard record keeping system, have resulted from the termination. The Contractor shall not be required to comply with the cost accounting standards or contract cost principles for this purpose. This paragraph does not give the Government any right to audit the Contractor's records. The Contractor shall not be paid for any work performed or costs incurred that reasonably could have been avoided.

(g) Termination for cause. The Government may terminate this contract, or any part hereof, for cause in the event of any default by the Contractor, or if the Contractor fails to comply with any contract terms and conditions, or fails to provide the Government, upon request, with adequate assurances of future performance. In the event of termination for cause, the Government shall not be liable to the Contractor for any amount for supplies or services not accepted, and the Contractor shall be liable to the Government for any and all rights and remedies provided by law. If it is determined that the Government improperly terminated this contract for default, such termination shall be deemed a termination for convenience.

(h) Warranty. The Contractor warrants and implies that the items delivered hereunder are merchantable and fit for use for the particular purpose described in this contract.

(End of clause)

52.215-5 FACSIMILE PROPOSALS (OCT 1997)

(a) Definition. Facsimile proposal, as used in this provision, means a proposal, revision or modification of a proposal, or withdrawal of a proposal that is transmitted to and received by the Government via facsimile machine.

(b) Offerors may submit facsimile proposals as responses to this solicitation. Facsimile proposals are subject to the same rules as paper proposals.

(c) The telephone number of receiving facsimile equipment is: **(301) 744-6632**.

(d) If any portion of a facsimile proposal received by the Contracting Officer is unreadable to the degree that conformance to the essential requirements of the solicitation cannot be ascertained from the document--

(1) The Contracting Officer immediately shall notify the offeror and permit the offeror to resubmit the proposal;

(2) The method and time for resubmission shall be prescribed by the Contracting Officer after consultation with the offeror; and

(3) The resubmission shall be considered as if it were received at the date and time of the original unreadable submission for the purpose of determining timeliness, provided the offeror complies with the time and format requirements for resubmission prescribed by the Contracting Officer.

The Government reserves the right to make award solely on the facsimile proposal. However, if requested to do so by the Contracting Officer, the apparently successful offeror promptly shall submit the complete original signed proposal.

(End of provision)

52.217-7 OPTION FOR INCREASED QUANTITY--SEPARATELY PRICED LINE ITEM (MAR 1989)

The Government may require the delivery of the numbered line item, identified in the Schedule as an option item, in the quantity and at the price stated in the Schedule. The Contracting Officer may exercise the option by written notice to the Contractor within **5 years**. Delivery of added items shall continue at the same rate that like items are called for under the contract, unless the parties otherwise agree.

(End of clause)

52.219-1 SMALL BUSINESS PROGRAM REPRESENTATIONS (MAY 2004)

(a)(1) The North American Industry Classification System (NAICS) code for this acquisition is **332995**.

(2) The small business size standard is **500 Employees**.

(3) The small business size standard for a concern which submits an offer in its own name, other than on a construction or service contract, but which proposes to furnish a product which it did not itself manufacture, is 500 employees.

(b) Representations. (1) The offeror represents as part of its offer that it ( ) is, ( ) is not a small business concern.

(2) (Complete only if the offeror represented itself as a small business concern in paragraph (b)(1) of this provision.) The offeror represents, for general statistical purposes, that it ( ) is, ( ) is not a small disadvantaged business concern as defined in 13 CFR 124.1002.

(3) (Complete only if the offeror represented itself as a small business concern in paragraph (b)(1) of this provision.) The offeror represents as part of its offer that it ( ) is, ( ) is not a women-owned small business concern.

(4) (Complete only if the offeror represented itself as a small business concern in paragraph (b)(1) of this provision.) The offeror represents as part of its offer that it ( ) is, ( ) is not a veteran-owned small business concern.

(5) (Complete only if the offeror represented itself as a veteran-owned small business concern in paragraph (b)(4) of this provision.) The offeror represents as part of its offer that it ( ) is, ( ) is not a service-disabled veteran-owned small business concern.

(6) (Complete only if the offeror represented itself as a small business concern in paragraph (b)(1) of this provision.) The offeror represents, as part of its offer, that--

(i) It ( ) is, ( ) is not a HUBZone small business concern listed, on the date of this representation, on the List of Qualified HUBZone Small Business Concerns maintained by the Small Business Administration, and no material change in ownership and control, principal office, or HUBZone employee percentage has occurred since it was certified by the Small Business Administration in accordance with 13 CFR part 126; and

(ii) It ( ) is, ( ) is not a joint venture that complies with the requirements of 13 CFR part 126, and the representation in paragraph (b)(6)(i) of this provision is accurate for the HUBZone small business concern or concerns that are participating in the joint venture. (The offeror shall enter the name or names of the HUBZone small business concern or concerns that are participating in the joint venture:_____.) Each HUBZone small business concern participating in the joint venture shall submit a separate signed copy of the HUBZone representation.

(c) Definitions. As used in this provision--

Service-disabled veteran-owned small business concern--

(1) Means a small business concern--

(i) Not less than 51 percent of which is owned by one or more service-disabled veterans or, in the case of any publicly owned business, not less than 51 percent of the stock of which is owned by one or more service-disabled veterans; and

(ii) The management and daily business operations of which are controlled by one or more service-disabled veterans or, in the case of a service-disabled veteran with permanent and severe disability, the spouse or permanent caregiver of such veteran.

(2) Service-disabled veteran means a veteran, as defined in 38 U.S.C. 101(2), with a disability that is service-connected, as defined in 38 U.S.C. 101(16).

"Small business concern," means a concern, including its affiliates, that is independently owned and operated, not dominant in the field of operation in which it is bidding on Government contracts, and qualified as a small business under the criteria in 13 CFR Part 121 and the size standard in paragraph (a) of this provision.

Veteran-owned small business concern means a small business concern--

(1) Not less than 51 percent of which is owned by one or more veterans (as defined at 38 U.S.C. 101(2)) or, in the case of any publicly owned business, not less than 51 percent of the stock of which is owned by one or more veterans; and

(2) The management and daily business operations of which are controlled by one or more veterans.

"Women-owned small business concern," means a small business concern --

(1) That is at least 51 percent owned by one or more women; in the case of any publicly owned business, at least 51 percent of the stock of which is owned by one or more women; and

(2) Whose management and daily business operations are controlled by one or more women.

(d) Notice.

(1) If this solicitation is for supplies and has been set aside, in whole or in part, for small business concerns, then the clause in this solicitation providing notice of the set-aside contains restrictions on the source of the end items to be furnished.

(2) Under 15 U.S.C. 645(d), any person who misrepresents a firm's status as a small, HUBZone small, small disadvantaged, or women-owned small business concern in order to obtain a contract to be awarded under the preference programs established pursuant to section 8(a), 8(d), 9, or 15 of the Small Business Act or any other provision of Federal law that specifically references section 8(d) for a definition of program eligibility, shall--

(i) Be punished by imposition of fine, imprisonment, or both;

(ii) Be subject to administrative remedies, including suspension and debarment; and

(iii) Be ineligible for participation in programs conducted under the authority of the Act.

(End of provision)

52.219-6 NOTICE OF TOTAL SMALL BUSINESS SET-ASIDE (JUN 2003)

(a) Definition.

"Small business concern," as used in this clause, means a concern, including its affiliates, that is independently owned and operated, not dominant in the field of operation in which it is bidding on Government contracts, and qualified as a small business under the size standards in this solicitation.

(b) General. (1) Offers are solicited only from small business concerns. Offers received from concerns that are not small business concerns shall be considered nonresponsive and will be rejected.

(2) Any award resulting from this solicitation will be made to a small business concern.

(c) Agreement. A small business concern submitting an offer in its own name shall furnish, in performing the contract, only end items manufactured or produced by small business concerns in the United States or its outlying areas. If this procurement is processed under simplified **acquisition** procedures and the total amount of this contract does not exceed $25,000, a small business concern may furnish the product of any domestic firm. This paragraph

does not apply to construction or service contracts.

(End of clause)

52.222-22 PREVIOUS CONTRACTS AND COMPLIANCE REPORTS (FEB 1999)

The offeror represents that --

(a) ( ) It has, ( ) has not participated in a previous contract or subcontract subject to the Equal Opportunity clause of this solicitation;

(b) ( ) It has, ( ) has not, filed all required compliance reports; and

(c) Representations indicating submission of required compliance reports, signed by proposed subcontractors, will be obtained before subcontract awards.

(End of provision)

52.222-25 AFFIRMATIVE ACTION COMPLIANCE (APR 1984)

The offeror represents that

(a) [ ] it has developed and has on file, [ ] has not developed and does not have on file, at each establishment, affirmative action programs required by the rules and regulations of the Secretary of Labor (41 CFR 60-1 and 60-2), or

(b) [ ] has not previously had contracts subject to the written affirmative action programs requirement of the rules and regulations of the Secretary of Labor.

(End of provision)

52.222-26 EQUAL OPPORTUNITY (APR 2002)

(a) Definition. United States, as used in this clause, means the 50 States, the District of Columbia, Puerto Rico, the Northern Mariana Islands, American Samoa, Guam, the U.S. Virgin Islands, and Wake Island.

(b) If, during any 12-month period (including the 12 months preceding the award of this contract), the Contractor has been or is awarded nonexempt Federal contracts and/or subcontracts that have an aggregate value in excess of $10,000, the Contractor shall comply with paragraphs (b)(1) through (b)(11) of this clause, except for work performed outside the United States by employees who were not recruited within the United States. Upon request, the Contractor shall provide information necessary to determine the applicability of this clause.

(1) The Contractor shall not discriminate against any employee or applicant for employment because of race, color, religion, sex, or national origin. However, it shall not be a violation of this clause for the Contractor to extend a publicly announced preference in employment to Indians living on or near an Indian reservation, in connection with employment opportunities on or near an Indian reservation, as permitted by 41 CFR 60-1.5.

(2) The Contractor shall take affirmative action to ensure that applicants are employed, and that employees are treated during employment, without regard to their race, color, religion, sex, or national origin. This shall include,

but not be limited to, (i) employment, (ii) upgrading, (iii) demotion, (iv) transfer, (v) recruitment or recruitment advertising, (vi) layoff or termination, (vii) rates of pay or other forms of compensation, and (viii) selection for training, including apprenticeship.

(3) The Contractor shall post in conspicuous places available to employees and applicants for employment the notices to be provided by the Contracting Officer that explain this clause.

(4) The Contractor shall, in all solicitations or advertisements for employees placed by or on behalf of the Contractor, state that all qualified applicants will receive consideration for employment without regard to race, color, religion, sex, or national origin.

(5) The Contractor shall send, to each labor union or representative of workers with which it has a collective bargaining agreement or other contract or understanding, the notice to be provided by the Contracting Officer advising the labor union or workers' representative of the Contractor's commitments under this clause, and post copies of the notice in conspicuous places available to employees and applicants for employment.

(6) The Contractor shall comply with Executive Order 11246, as amended, and the rules, regulations, and orders of the Secretary of Labor.

(7) The Contractor shall furnish to the contracting agency all information required by Executive Order 11246, as amended, and by the rules, regulations, and orders of the Secretary of Labor. The Contractor shall also file Standard Form 100 (EEO-1), or any successor form, as prescribed in 41 CFR part 60-1. Unless the Contractor has filed within the 12 months preceding the date of contract award, the Contractor shall, within 30 days after contract award, apply to either the regional Office of Federal Contract Compliance Programs (OFCCP) or the local office of the Equal Employment Opportunity Commission for the necessary forms.

(8) The Contractor shall permit access to its premises, during normal business hours, by the contracting agency or the OFCCP for the purpose of conducting on-site compliance evaluations and complaint investigations. The Contractor shall permit the Government to inspect and copy any books, accounts, records (including computerized records), and other material that may be relevant to the matter under investigation and pertinent to compliance with Executive Order 11246, as amended, and rules and regulations that implement the Executive Order.

(9) If the OFCCP determines that the Contractor is not in compliance with this clause or any rule, regulation, or order of the Secretary of Labor, this contract may be canceled, terminated, or suspended in whole or in part and the Contractor may be declared ineligible for further Government contracts, under the procedures authorized in Executive Order 11246, as amended. In addition, sanctions may be imposed and remedies invoked against the Contractor as provided in Executive Order 11246, as amended; in the rules, regulations, and orders of the Secretary of Labor; or as otherwise provided by law.

(10) The Contractor shall include the terms and conditions of subparagraphs (b)(1) through (11) of this clause in every subcontract or purchase order that is not exempted by the rules, regulations, or orders of the Secretary of Labor issued under Executive Order 11246, as amended, so that these terms and conditions will be binding upon each subcontractor or vendor.

(11) The Contractor shall take such action with respect to any subcontract or purchase order as the contracting officer may direct as a means of enforcing these terms and conditions, including sanctions for noncompliance; provided, that if the Contractor becomes involved in, or is threatened with, litigation with a subcontractor or vendor as a result of any direction, the Contractor may request the United States to enter into the litigation to protect the interests of the United States.

(c) Notwithstanding any other clause in this contract, disputes relative to this clause will be governed by the procedures in 41 CFR 60-1.1.

(End of clause)

52.232-33 PAYMENT BY ELECTRONIC FUNDS TRANSFER—CENTRAL CONTRACTOR REGISTRATION (OCT 2003)

(a) Method of payment. (1) All payments by the Government under this contract shall be made by electronic funds transfer (EFT), except as provided in paragraph (a)(2) of this clause. As used in this clause, the term “EFT” refers to the funds transfer and may also include the payment information transfer.

(2) In the event the Government is unable to release one or more payments by EFT, the Contractor agrees to either--

(i) Accept payment by check or some other mutually agreeable method of payment; or

(ii) Request the Government to extend the payment due date until such time as the Government can make payment by EFT (but see paragraph (d) of this clause).

(b) Contractor's EFT information. The Government shall make payment to the Contractor using the EFT information contained in the Central Contractor Registration (CCR) database. In the event that the EFT information changes, the Contractor shall be responsible for providing the updated information to the CCR database.

(c) Mechanisms for EFT payment. The Government may make payment by EFT through either the Automated Clearing House (ACH) network, subject to the rules of the National Automated Clearing House Association, or the Fedwire Transfer System. The rules governing Federal payments through the ACH are contained in 31 CFR part 210.

(d) Suspension of payment. If the Contractor's EFT information in the CCR database is incorrect, then the Government need not make payment to the Contractor under this contract until correct EFT information is entered into the CCR database; and any invoice or contract financing request shall be deemed not to be a proper invoice for the purpose of prompt payment under this contract. The prompt payment terms of the contract regarding notice of an improper invoice and delays in accrual of interest penalties apply.

(e) Liability for uncompleted or erroneous transfers. (1) If an uncompleted or erroneous transfer occurs because the Government used the Contractor's EFT information incorrectly, the Government remains responsible for--

(i) Making a correct payment;

(ii) Paying any prompt payment penalty due; and

(iii) Recovering any erroneously directed funds.

(2) If an uncompleted or erroneous transfer occurs because the Contractor's EFT information was incorrect, or was revised within 30 days of Government release of the EFT payment transaction instruction to the Federal Reserve System, and--

(i) If the funds are no longer under the control of the payment office, the Government is deemed to have made payment and the Contractor is responsible for recovery of any erroneously directed funds; or

(ii) If the funds remain under the control of the payment office, the Government shall not make payment, and the provisions of paragraph (d) of this clause shall apply.

(f) EFT and prompt payment. A payment shall be deemed to have been made in a timely manner in accordance with the prompt payment terms of this contract if, in the EFT payment transaction instruction released to the Federal

Reserve System, the date specified for settlement of the payment is on or before the prompt payment due date, provided the specified payment date is a valid date under the rules of the Federal Reserve System.

(g) EFT and assignment of claims. If the Contractor assigns the proceeds of this contract as provided for in the assignment of claims terms of this contract, the Contractor shall require as a condition of any such assignment, that the assignee shall register separately in the CCR database and shall be paid by EFT in accordance with the terms of this clause. Notwithstanding any other requirement of this contract, payment to an ultimate recipient other than the Contractor, or a financial institution properly recognized under an assignment of claims pursuant to subpart 32.8, is not permitted. In all respects, the requirements of this clause shall apply to the assignee as if it were the Contractor. EFT information that shows the ultimate recipient of the transfer to be other than the Contractor, in the absence of a proper assignment of claims acceptable to the Government, is incorrect EFT information within the meaning of paragraph (d) of this clause.

(h) Liability for change of EFT information by financial agent. The Government is not liable for errors resulting from changes to EFT information made by the Contractor's financial agent.

(i) Payment information. The payment or disbursing office shall forward to the Contractor available payment information that is suitable for transmission as of the date of release of the EFT instruction to the Federal Reserve System. The Government may request the Contractor to designate a desired format and method(s) for delivery of payment information from a list of formats and methods the payment office is capable of executing. However, the Government does not guarantee that any particular format or method of delivery is available at any particular payment office and retains the latitude to use the format and delivery method most convenient to the Government. If the Government makes payment by check in accordance with paragraph (a) of this clause, the Government shall mail the payment information to the remittance address contained in the CCR database.

(End of Clause)

52.247-45 F.O.B. ORIGIN AND/OR F.O.B. DESTINATION EVALUATION (APR 1984)

Offers are invited on the basis of both f.o.b. origin and f.o.b. destination, and the Government will award on the basis the Contracting Officer determines to be most advantageous to the Government. An offer on the basis of f.o.b. origin only or f.o.b. destination only is acceptable, but will be evaluated only on the basis submitted.

(End of provision)

252.204-7001 COMMERCIAL AND GOVERNMENT ENTITY (CAGE) CODE REPORTING (AUG 1999)

(a) The offeror is requested to enter its CAGE code on its offer in the block with its name and address. The CAGE code entered must be for that name and address. Enter “CAGE” before the number.

(b) If the offeror does not have a CAGE code, it may ask the Contracting Officer to request one from the Defense Logistics Information Service (DLIS). The Contracting Officer will--

(1) Ask the Contractor to complete section B of a DD Form 2051, Request for Assignment of a Commercial and Government Entity (CAGE) Code;

(2) Complete section A and forward the form to DLIS; and

(3) Notify the Contractor of its assigned CAGE code.

(c) Do not delay submission of the offer pending receipt of a CAGE code.

(End of provision)

252.204-7004 CENTRAL CONTRACTOR REGISTRATION (52.204-7) ALTERNATE A (NOV 2003)

(a) Definitions. As used in this clause--

“Central Contractor Registration (CCR) database” means the primary Government repository for contractor information required for the conduct of business with the Government.

“Commercial and Government Entity (CAGE) code” means--

(1) A code assigned by the Defense Logistics Information Service (DLIS) to identify a commercial or Government entity; or

(2) A code assigned by a member of the North Atlantic Treaty Organization that DLIS records and maintains in the CAGE master file. This type of code is known as an “NCAGE code.”

“Data Universal Numbering System (DUNS) number” means the 9-digit number assigned by Dun and Bradstreet, Inc. (D&B) to identify unique business entities.

“Data Universal Numbering System +4 (DUNS+4) number” means the DUNS number assigned by D&B plus a 4-character suffix that may be assigned by a business concern. (D&B has no affiliation with this 4-character suffix.) This 4-character suffix may be assigned at the discretion of the business concern to establish additional CCR records for identifying alternative Electronic Funds Transfer (EFT) accounts (see Subpart 32.11 of the Federal Acquisition Regulation) for the same parent concern.

“Registered in the CCR database” means that--

(1) The Contractor has entered all mandatory information, including the DUNS number or the DUNS+4 number, into the CCR database;

(2) The Contractor's CAGE code is in the CCR database; and

(3) The Government has validated all mandatory data fields and has marked the records “Active.”

(b)(1) By submission of an offer, the offeror acknowledges the requirement that a prospective awardee shall be registered in the CCR database prior to award, during performance, and through final payment of any contract, basic agreement, basic ordering agreement, or blanket purchasing agreement resulting from this solicitation.

(2) The offeror shall enter, in the block with its name and address on the cover page of its offer, the annotation "DUNS" or "DUNS +4" followed by the DUNS or DUNS +4 number that identifies the offeror's name and address exactly as stated in the offer. The DUNS number will be used by the Contracting Officer to verify that the offeror is registered in the CCR database.

(c) If the offeror does not have a DUNS number, it should contact Dun and Bradstreet directly to obtain one.

(1) An offeror may obtain a DUNS number-

(i) If located within the United States, by calling Dun and Bradstreet at 1-866-705-5711 or via the Internet at http://www.dnb.com; or

(ii) If located outside the United States, by contacting the local Dun and Bradstreet office.

(2) The offeror should be prepared to provide the following information:

(i) Company legal business.

(ii) Tradestyle, doing business, or other name by which your entity is commonly recognized.

(iii) Company Physical Street Address, City, State, and Zip Code.

(iv) Company Mailing Address, City, State and Zip Code (if separate from physical).

(v) Company Telephone Number.

(vi) Date the company was started.

(vii) Number of employees at your location.

(viii) Chief executive officer/key manager.

(ix) Line of business (industry).

(x) Company Headquarters name and address (reporting relationship within your entity).

(d) If the Offeror does not become registered in the CCR database in the time prescribed by the Contracting Officer, the Contracting Officer will proceed to award to the next otherwise successful registered Offeror.

(e) Processing time, which normally takes 48 hours, should be taken into consideration when registering. Offerors who are not registered should consider applying for registration immediately upon receipt of this solicitation.

(f) The Contractor is responsible for the accuracy and completeness of the data within the CCR database, and for any liability resulting from the Government's reliance on inaccurate or incomplete data. To remain registered in the CCR database after the initial registration, the Contractor is required to review and update on an annual basis from the date of initial registration or subsequent updates its information in the CCR database to ensure it is current, accurate and complete. Updating information in the CCR does not alter the terms and conditions of this contract and is not a substitute for a properly executed contractual document.

(g)
(1)
(i) If a Contractor has legally changed its business name, "doing business as" name, or division name (whichever is shown on the contract), or has transferred the assets used in performing the contract, but has not completed the necessary requirements regarding novation and change-of-name agreements in Subpart 42.12, the Contractor shall provide the responsible Contracting Officer a minimum of one business day's written notification of its intention to (A) change the name in the CCR database; (B) comply with the requirements of Subpart 42.12 of the FAR; and (C) agree in writing to the timeline and procedures specified by the responsible Contracting Officer. The Contractor must provide with the notification sufficient documentation to support the legally changed name.

(ii) If the Contractor fails to comply with the requirements of paragraph (g)(1)(i) of this clause, or fails to perform the agreement at paragraph (g)(1)(i)(C) of this clause, and, in the absence of a properly executed novation or change-of-name agreement, the CCR information that shows the Contractor to be other than the Contractor indicated in the contract will be considered to be incorrect information within the meaning of the "Suspension of Payment" paragraph of the electronic funds transfer (EFT) clause of this contract.

(2) The Contractor shall not change the name or address for EFT payments or manual payments, as appropriate, in the CCR record to reflect an assignee for the purpose of assignment of claims (see FAR Subpart 32.8, Assignment of Claims). Assignees shall be separately registered in the CCR database. Information provided to the Contractor's CCR record that indicates payments, including those made by EFT, to an ultimate recipient other than that Contractor will be considered to be incorrect information within the meaning of the "Suspension of payment" paragraph of the EFT clause of this contract.

(h) Offerors and Contractors may obtain information on registration and annual confirmation requirements via the internet at http://www.ccr.gov or by calling 1-888-227-2423, or 269-961-5757.

(End of clause)

252.232-7003 ELECTRONIC SUBMISSION OF PAYMENT REQUESTS (MAY 2006)

(a) Definitions. As used in this clause--

(1) Contract financing payment and invoice payment have the meanings given in section 32.001 of the Federal Acquisition Regulation.

(2) Electronic form means any automated system that transmits information electronically from the initiating system to all affected systems. Facsimile, e-mail, and scanned documents are not acceptable electronic forms for submission of payment requests. However, scanned documents are acceptable when they are part of a submission of a payment request made using one of the electronic forms provided for in paragraph (b) of this clause.

(3) Payment request means any request for contract financing payment or invoice payment submitted by the Contractor under this contract.

(b) Except as provided in paragraph (c) of this clause, the Contractor shall submit payment requests using one of the following electronic forms:

(1) Wide Area WorkFlow-Receipt and Acceptance (WAWF-RA). Information regarding WAWF-RA is available on the Internet at https://wawf.eb.mil.

(2) Web Invoicing System (WInS). Information regarding WInS is available on the Internet at https://ecweb.dfas.mil.

(3) American National Standards Institute (ANSI) X.12 electronic data interchange (EDI) formats.

(i) Information regarding EDI formats is available on the Internet at http://www.X12.org.

(ii) EDI implementation guides are available on the Internet at http://www.dod.mil/dfas/.

(4) Another electronic form authorized by the Contracting Officer.

(c) If the Contractor is unable to submit a payment request in electronic form, or DoD is unable to receive a payment request in electronic form, the Contractor shall submit the payment request using a method mutually agreed to by the Contractor, the Contracting Officer, the contract administration office, and the payment office.

(d) In addition to the requirements of this clause, the Contractor shall meet the requirements of the appropriate payment clauses in this contract when submitting payments requests.

(End of clause)

**IHD 47 - INSPECTION AND ACCEPTANCE TIMEFRAME (NAVSEA/IHD) FEB 2000**

Inspection and acceptance of supplies to be furnished under this contract shall be made by the Government within 45 days after receipt of material. Payment will be tendered not later than 30 days after acceptance has occurred.

Section F - Deliveries or Performance

DELIVERY INFORMATION

| CLIN | DELIVERY DATE | QUANTITY | SHIP TO ADDRESS | UIC |
|---|---|---|---|---|
| 0001 | 120 dys. ADC | 100 each | NAVSEA INDIAN HEAD<br>RECEIVING OFFICER, BLDG. 116<br>101 STRAUSS AVE.<br>INDIAN HEAD MD 20640-5035<br>301/744-4861<br>FOB: Destination | N00174 |
| 0002 | After excerise of option. | Stepladder Qty. | SAME AS ABOVE | N00174 |
| 0003 | After excerise of option. | Stepladder Qty. | SAME AS ABOVE | N00174 |
| 0004 | After excerise of option. | Stepladder Qty. | SAME AS ABOVE | N00174 |
| 0005 | After excerise of option. | Stepladder Qty. | SAME AS ABOVE | N00174 |
| 0006 | After excerise of option. | 50 each | SAME AS ABOVE | N00174 |
| 0007 | After excerise of option. | Stepladder Qty. | SAME AS ABOVE | N00174 |
| 0008 | After excerise of option. | Stepladder Qty. | SAME AS ABOVE | N00174 |
| 0009 | After excerise of option. | Stepladder Qty. | SAME AS ABOVE | N00174 |
| 0010 | After excerise of option. | Stepladder Qty. | SAME AS ABOVE | N00174 |
| 0011 | 120 dys. ADC | 50 each | SAME AS ABOVE | N00174 |
| 0012 | After excerise of option. | Stepladder Qty. | SAME AS ABOVE | N00174 |
| 0013 | After excerise of option. | Stepladder Qty. | SAME AS ABOVE | N00174 |
| 0014 | After excerise of option. | Stepladder Qty. | SAME AS ABOVE | N00174 |
| 0015 | After excerise of option. | Stepladder Qty. | SAME AS ABOVE | N00174 |
| 0016 | 120 dys. ADC | 50 each | SAME AS ABOVE | N00174 |
| 0017 | After excerise of option. | Stepladder Qty. | SAME AS ABOVE | N00174 |
| 0018 | After excerise of option. | Stepladder Qty. | SAME AS ABOVE | N00174 |
| 0019 | After excerise of option. | Stepladder Qty. | SAME AS ABOVE | N00174 |
| 0020 | After excerise of option. | Stepladder Qty. | SAME AS ABOVE | N00174 |

| | | | | |
|---|---|---|---|---|
| 0021 | 120 dys. ADC | 100 each | SAME AS ABOVE | N00174 |
| 0022 | After excerise of option. | Stepladder Qty. | SAME AS ABOVE | N00174 |
| 0023 | After excerise of option. | Stepladder Qty. | SAME AS ABOVE | N00174 |
| 0024 | After excerise of option. | Stepladder Qty. | SAME AS ABOVE | N00174 |
| 0025 | After excerise of option. | Stepladder Qty. | SAME AS ABOVE | N00174 |
| 0026 | 120 dys. ADC | 100 each | SAME AS ABOVE | N00174 |
| 0027 | After excerise of option. | Stepladder Qty. | SAME AS ABOVE | N00174 |
| 0028 | After excerise of option. | Stepladder Qty. | SAME AS ABOVE | N00174 |
| 0029 | After excerise of option. | Stepladder Qty. | SAME AS ABOVE | N00174 |
| 0030 | After excerise of option. | Stepladder Qty. | SAME AS ABOVE | N00174 |
| 0031 | 120 dys. ADC | 150 each | SAME AS ABOVE | N00174 |
| 0032 | After excerise of option. | Stepladder Qty. | SAME AS ABOVE | N00174 |
| 0033 | After excerise of option. | Stepladder Qty. | SAME AS ABOVE | N00174 |
| 0034 | After excerise of option. | Stepladder Qty. | SAME AS ABOVE | N00174 |
| 0035 | After excerise of option. | Stepladder Qty. | SAME AS ABOVE | N00174 |
| 0036 | 120 dys. ADC | 250 each | SAME AS ABOVE | N00174 |
| 0037 | After excerise of option. | Stepladder Qty. | SAME AS ABOVE | N00174 |
| 0038 | After excerise of option. | Stepladder Qty. | SAME AS ABOVE | N00174 |
| 0039 | After excerise of option. | Stepladder Qty. | SAME AS ABOVE | N00174 |
| 0040 | After excerise of option. | Stepladder Qty. | SAME AS ABOVE | N00174 |
| 0041 | 120 dys. ADC | 250 each | SAME AS ABOVE | N00174 |
| 0042 | After excerise of option. | Stepladder Qty. | SAME AS ABOVE | N00174 |
| 0043 | After excerise of option. | Stepladder Qty. | SAME AS ABOVE | N00174 |
| 0044 | After excerise of option. | Stepladder Qty. | SAME AS ABOVE | N00174 |
| 0045 | After excerise of option. | Stepladder Qty. | SAME AS ABOVE | N00174 |
| 0046 | 120 dys. ADC | 500 each | SAME AS ABOVE | N00174 |
| 0047 | After excerise of option. | Stepladder Qty. | SAME AS ABOVE | N00174 |

| | | | | |
|---|---|---|---|---|
| 0048 | After excerise of option. | Stepladder Qty. | SAME AS ABOVE | N00174 |
| 0049 | After excerise of option. | Stepladder Qty. | SAME AS ABOVE | N00174 |
| 0050 | After excerise of option. | Stepladder Qty. | SAME AS ABOVE | N00174 |

| CLASSIFICATION OF CHARACTERISTICS (DOD-STD-2100) | |
|---|---|
| CRITICAL- | 2 |
| MAJOR- | 2 |
| MINOR- | ALL OTHER CHARACTERISTICS |

| REVISIONS | | | |
|---|---|---|---|
| REV | DESCRIPTION | DATE | APPROVAL |
| A | SCE NOR 736AS159-A | 6/13/51 | Shaffer |
| B | S.L. NOR 736AS159-B | 8/11/78 | B.F. Shaffer |
| C | S.L. NOR 736AS159-C | 5/11/79 | T. Shaffer |
| D | S.L. NOR 736AS159-D | 8/27/79 | A. Pesquale |
| E | S.L. NOR 736AS159-E | 2/13/84 | T.L. Stokes |
| F | DECIMAL WHITE CHANGE, SEE ECP 81018 S1330 | 8/1/93 | J.L.S. |
| G | DECIMAL WHITE CHANGE, SEE ECP 84009 S1330 | 6/6/94 | [illegible] |

CAD MAINTAINED. CHANGES SHALL BE INCORPORATED BY THE DESIGN ACTIVITY

NOTES:

1. INTERPRET DRAWING IN ACCORDANCE WITH ASME Y14.5M-1994 AND ASME Y14.100-2000 WITH APPENDICES D, E, D, AND F
2. (C1) DOUBLE SHEAR STRENGTH OF WIRE TO BE 58-63 LBS. TEST SAMPLE SHALL BE TAKEN AT EACH 23 INCH LENGTH OF WIRE.
3. SURFACE ROUGHNESS 63 UNLESS OTHERWISE SPECIFIED
4. REMOVE ALL BURRS AND BREAK SHARP EDGES .023-.006.
5. (M101) CHEMICAL FILM PER MIL-C-5541 E CLASS 1A.
6. IDENTIFY IN ACCORDANCE WITH MIL-R-81126(1), METHOD V, TYPE I.
7. (C2) MATERIAL: AL ALLOY 5051-H6 PER SAE AMS-QQ-A-225/8M.

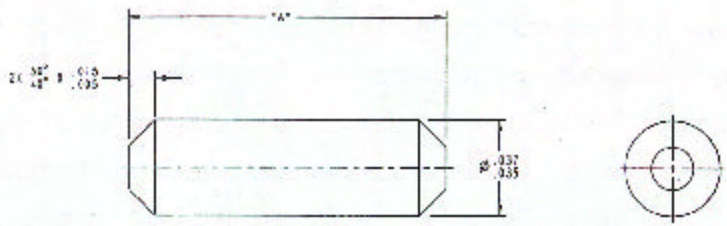


| DASH NO. | "A" DIM |
|---|---|
| 1 | .12 ± .015 |
| -2 | .41 + .00 -.01 |

DIM ARE

DISTRIBUTION STATEMENT C: Distribution authorized to U.S. Government agencies and their contractors; administrative or operational use, 7-1-93. Other requests for this document shall be referred to Commander, Indian Head Division, Naval Surface Warfare Center, Indian Head, MD 20640-5035.

| | |
|---|---|
| 1176017 | 0.1176005 |
| 9843-99 | 0.1885100 |
| 9443-91 | 0.1785100 |
| 9443-99 | 0.1455100 |
| 9443-91 | 0.1445100 |
| 7363-49 | 0.1283290 |
| 7363-391 | 0.1283290 |
| NEXT ASSY | USED ON |
| APPLICATION | |

UNLESS OTHERWISE SPECIFIED DIMENSIONS ARE IN INCHES
GENERAL TOLERANCES
XX DECIMALS ± —
XXX DECIMALS ± —
ANGLES ± —
MATERIAL:
DO NOT SCALE DRAWING

INDIAN HEAD DIVISION
NAVAL SURFACE WARFARE CENTER
INDIAN HEAD, MD 20640-5035

ENGINEER
ENGINEER
CHECKED
DRAWN
APPROVED FOR MFG — DATE

AUTHENTICATED 7/2/94

DEPARTMENT OF THE NAVY
NAVAL AIR SYSTEMS COMMAND
PATUXENT RIVER, MD 20670-1628

PIN, SHEAR, FIRING MECHANISM

| SIZE | CAGE CODE | DRAWING NUMBER |
|---|---|---|
| D | 30003 | 736AS159 |

SCALE NONE — SHEET 1 OF 1

| CLASSIFICATION OF CHARACTERISTICS (DOD STD 2164) | |
|---|---|
| CRITICAL | NONE |
| MAJOR | 5 |
| MINOR | ALL OTHER CHARACTERISTICS |

| REVISIONS | | | |
|---|---|---|---|
| REV | DESCRIPTION | DATE | APPROVED |
| A | S.E. ECP 95-0113P-009 | 5-5-95 | [illegible] |
| B | SFF ECP 02240-5-109 | 11-15-96 | [illegible] |

CAD PAIN FABRIC, CHANGES S ALL
OF MICHPICKA FOR BETTER DESIGN ACTIVITY

NOTES:

1. INTERPRET DRAWING IN ACCORDANCE WITH MIL-STD-100 AND ANSI Y14.5M-1982.

2. UNLESS OTHERWISE SPECIFIED:
   REMOVE BURRS, SHARP EDGES R .005 TO .010,
   FILLETS AND R .005 TO .010
   DEVIATE TEXTURE [illegible]

3. MATERIAL IS ACCORDANCE WITH MIL-A-8625, TYPE II, CLASS 2, TYPE COLOR
   ALL DIMENSIONS APPLY AFTER ANODIZATION.

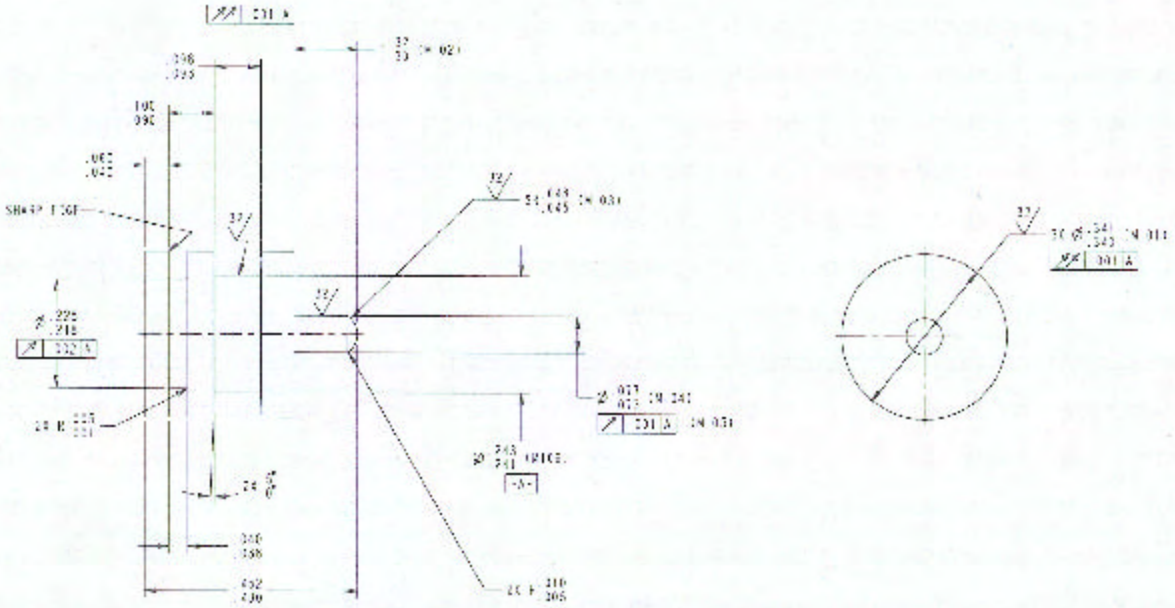


DISTRIBUTION STATEMENT C. Distribution authorized to U.S. Government agencies and their contractors; administrative or operational use, 7-1-95. Other requests for this document shall be referred to Commander, Indian Head Division, Naval Surface Warfare Center, Indian Head, MD 20640-5035.

| | | |
|---|---|---|
| 944AS220 | [illegible] | |
| 944AS278 | [illegible] | |
| NEXT ASSY | USED ON | |
| APPLICATION | | |

UNLESS OTHERWISE SPECIFIED DIMENSIONS ARE IN INCHES
GENERAL TOLERANCES
.X ± 0.1 DIMALS ±
.XX DECIMALS ± ---
ANGLES ±
MATERIAL:
7075-T6 ALUM ALLOY
PER QQ-A-225/9

DO NOT SCALE DRAWING

INDIAN HEAD DIVISION
NAVAL SURFACE WARFARE CENTER
INDIAN HEAD, MD 20640-5035

| | | |
|---|---|---|
| ENGINEER | | |
| ENGINEER | | |
| CHECKED | | |
| DRAWN | | |
| APPROVED FOR | | DATE |

AUTHENTICATED BY

DEPARTMENT OF THE NAVY
NAVAL AIR SYSTEMS COMMAND
PATUXENT RIVER, MD 20670-1620

PIN, FIRING

| SIZE | CAGE CODE | DRAWING NUMBER |
|---|---|---|
| D | 30003 | 944AS207 |

SCALE: 5/1 SHEET 1 OF

| CLASSIFICATION OF CHARACTERISTICS (DOD-STD-2118) | |
|---|---|
| CRITICAL | NONE |
| MAJOR | NONE |
| MINOR | ALL OTHER CHARACTERISTICS |

| REVISIONS | | | |
|---|---|---|---|
| REV | DESCRIPTION | DATE | APPROVAL |
| A | STF FCP 65-5112M-027 | 2/25/92 | [illegible] |
| B | S.L. ECP 94340-5110A | [illegible] | [illegible] |

CAD MAINTAINED. CHANGES SHALL BE INCORPORATED BY TIC DESIGN ACTIVITY

NOTES:

1. THIS PART DRAWING IS ACCORDANCE WITH MIL-STD-100

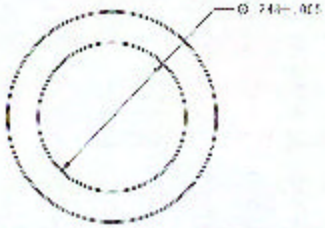


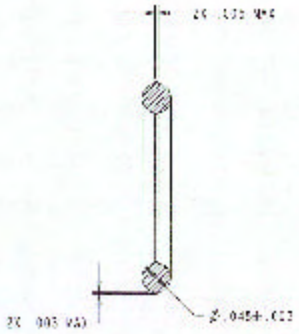


SECTION A-A

THE LISTING OF THE SUGGESTED SOURCE(S) OF SUPPLY HEREIN IS NOT TO BE CONSTRUED AS A GUARANTEE OF PRESENT OR CONTINUED AVAILABILITY AS A SOURCE FOR THE ITEM(S).

| SUGGESTED SOURCE(S) OF SUPPLY | | |
|---|---|---|
| FSCM | PART NUMBER | NAME AND ADDRESS |
| 17306 | S-130 | PARKER-HANNIFIN CORP SEAL O-RING DIV 2360 PALMER DR FAIRVIEW OR 40309 |

SPECIFICATION CONTROL DRAWING

DISTRIBUTION STATEMENT D: Distribution authorized to U.S. Government agencies and their contractors only; administrative or operational use, 1-1-92. Other requests for this document shall be referred to Commander, Indian Head Division, Naval Surface Warfare Center, Indian Head, MD 20640-5035.

| | | |
|---|---|---|
| 944A5278 | 3157A573 | |
| 944A7229 | 3154A432 2 | |
| NEXT ASSY | USED ON | |
| APPLICATION | | |

UNLESS OTHERWISE SPECIFIED DIMENSIONS ARE IN INCHES
GENERAL TOLERANCES
XX DEC PLACES ±
XXX DEC PLACES ±
ANGLES ±
MATERIAL: ANSI 304
DO NOT SCALE DRAWING

INDIAN HEAD DIVISION
NAVAL SURFACE WARFARE CENTER
INDIAN HEAD, MD 20640-5035

ENGINEER
ENGINEER
CHECKED
DRAWN
APPROVAL FOR PROD
DATE

AUTHENTICATED

DEPARTMENT OF THE NAVY
NAVAL AIR SYSTEMS COMMAND
PATUXENT RIVER, MD 20670-1628

O-RING

| SIZE | CAGE CODE | DRAWING NUMBER |
|---|---|---|
| D | 30003 | 944AS210 |

SCALE: NONE

SHEET 1 OF 1

NOTES:

1. INTERPRET DRAWING IN ACCORDANCE WITH MIL-STD-100 AND ANSI Y14.5M-1982.
2. REMOVE ALL BURRS, BREAK SHARP EDGES .030 - .020 EXCEPT WHERE SPECIFIED OTHERWISE. 250 - .002 EXCEPT WHERE SPECIFIED. 125/MIL OVER FINISH UNLESS SPECIFIED.
3. PAINT PER MIL-P-15328, TYPE II.
4. ACCEPTABILITY OF SCREW HELICOID SHALL BE DETERMINED BASED ON SYSTEM 2 ANSI Z234.1-1968.

5. INTERIM: CRES 303 (UNS S30300) A PER ASTM A-582.

CLASSIFICATION OF CHARACTERISTICS (DOD STD-1313)

| | |
|---|---|
| CRITICAL | 2 |
| MAJOR | 3 |
| MINOR | A - ATTRIBUTES/VARIFICATION |

REVISIONS

| REV | DESCRIPTION | DATE | APPROVAL |
|---|---|---|---|
| A | ALL DIM CHANGED TO ENG. | 11-16-94 | |

CAP PAINTED RED. 3 PAGES SHALL BE INCORPORATED IN TRIALS OR ACTIVITY.

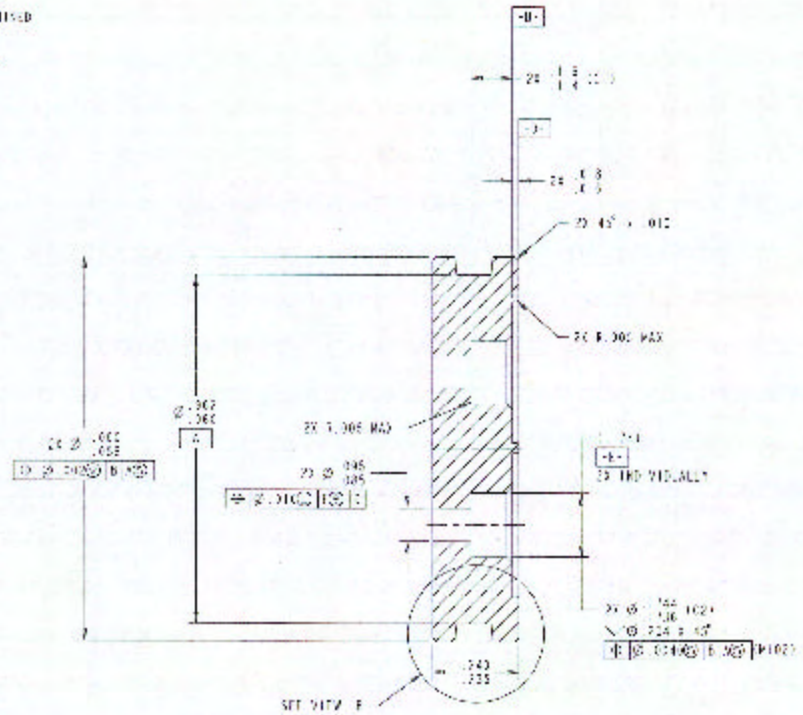


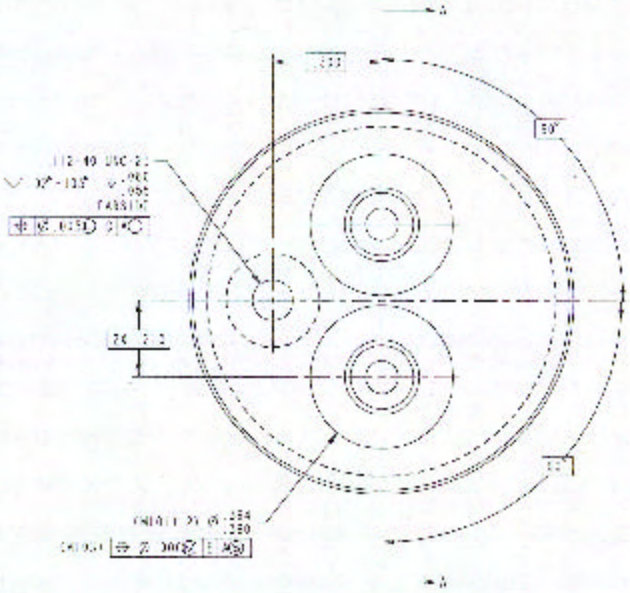

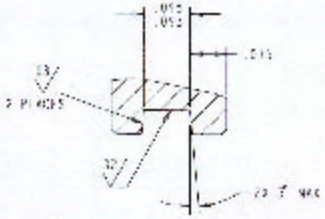

DETAIL B
SCALE 8:1

DISTRIBUTION STATEMENT C: Distribution authorized to U.S. Government agencies and their contractors; administrative or operational use, 1-1-93. Other requests for this document shall be referred to Commander, Indian Head Division, Naval Surface Warfare Center, Indian Head, MD 20640-5035.

| | | |
|---|---|---|
| DRAWN | | |
| TRACED | | |
| NEXT ASSY | USED ON | |
| APPLICATION | | |

UNLESS OTHERWISE SPECIFIED DIMENSIONS ARE IN INCHES
GENERAL TOLERANCES
.XX DECIMALS = ± .03
.XXX DECIMALS = ± .005
ANGLES ± 5.0°
MATERIAL
DO NOT SCALE DRAWING

INDIAN HEAD DIVISION
NAVAL SURFACE WARFARE CENTER
INDIAN HEAD, MD 20640-5035

| | | |
|---|---|---|
| ENGINEER | | |
| ENGINEER | | |
| PREPARED | | |
| DRAWN | | |
| APPROVED FOR | | DATE |

AUTHENTICATED

DEPARTMENT OF THE NAVY
NAVAL AIR SYSTEMS COMMAND
PATUXENT RIVER, MD 20670-1898

PLATE, PRIMER

| SIZE | CAGE CODE | DRAWING NUMBER |
|---|---|---|
| D | 30003 | 944AS215 |

SCALE: 1:1 SHEET 1 OF 1

NOTES

1. INTERFILE DRAWING IS ACCORDANCE WITH MIL-STD-100 AND ANSI Y14.5M-1982.

2. MATERIAL PLASTIC EJECT AND TRIM COLLIDGE ACETATE IS ACCORDANCE W TH P-535 TYPE I, GRADE 2 STOCK T- ONALIZE

CLASSIFICATION OF CHARACTERISTICS (MIL-STD-2073)

| | |
|---|---|
| CRITICAL | NONE |
| MAJOR- | 1 |
| MINOR | ALL OTHER CHARACTERISTICS |

REVISIONS

| REV | DESCRIPTION | BY | APPROVAL |
|---|---|---|---|
| A | RELEASE PER ECO [illegible] | [illegible] | [illegible] |

CAD MODEL REC. CHANGES SHALL BE INCORPORATED IN THE DFS ON ACTIVITY

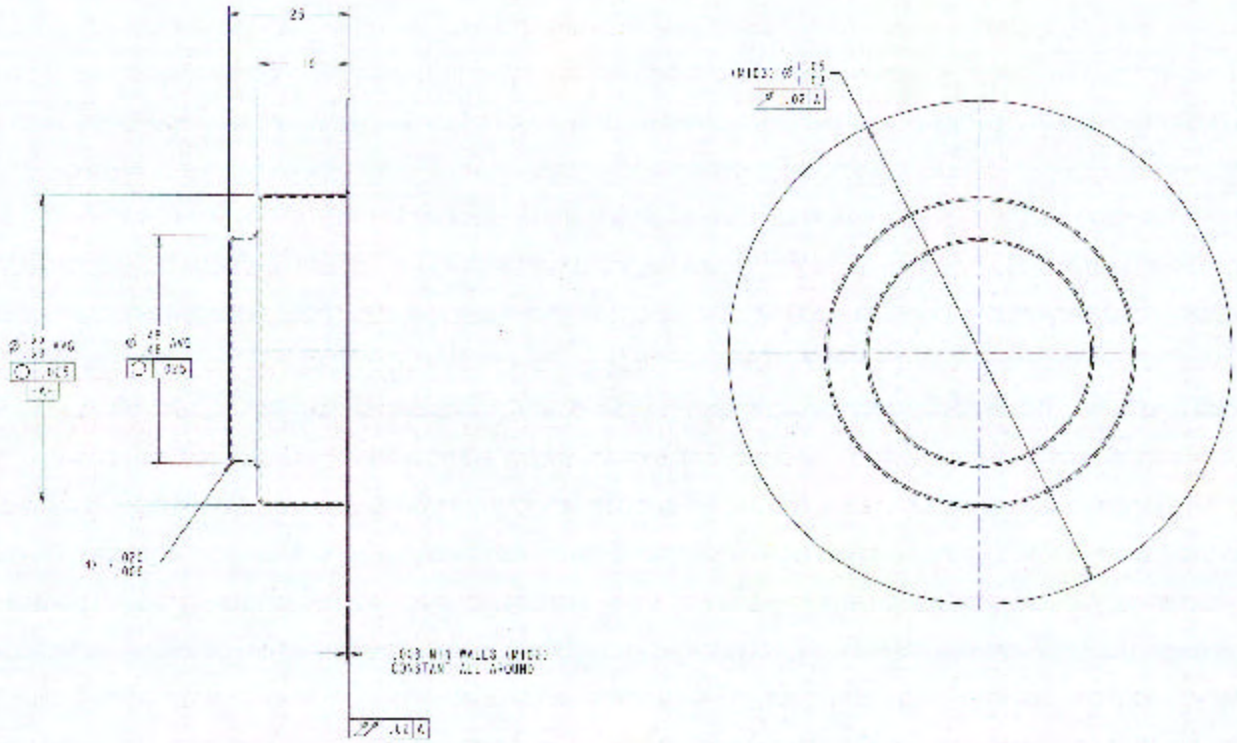


| | | |
|---|---|---|
| | | UNLESS OTHERWISE SPECIFIED DIMENSIONS ARE IN INCHES |
| | | GENERAL TOLERANCES |
| | | XX DECIMALS ± 0.01 |
| | | XXX DECIMALS ± 0.005 |
| | | ANGLES ± |
| | | MATERIAL |
| 97A0221 | PROJECT | |
| 97A0223 | DRAWING | |
| NEXT ASSY | USED ON | |
| APPLICATION | | DO NOT SCALE DRAWING |

INDIAN HEAD DIVISION
NAVAL SURFACE WARFARE CENTER
INDIAN HEAD, MD 20640-5035

DEPARTMENT OF THE NAVY
NAVAL AIR SYSTEMS COMMAND
PATUXENT RIVER, MD 20670-1498

ENGINEER
ENGINEER
CHECKED
DRAWN
APPROVED FOR
DATE

AUTHENTICATED

CLP, IGNITER

| SIZE | CAGE CODE | DRAWING NUMBER |
|---|---|---|
| D | 30003 | 944AS216 |

SCALE: 10:1 SHEET 1 OF 1

DISTRIBUTION STATEMENT C: Distribution authorized to U.S. Government agencies and their contractors only; [illegible] 1 Jul 94. Other requests for this document shall be referred to Commanding Officer and Director, Indian Head Division, Naval Surface Warfare Center, Indian Head, MD 20640-5035.

CLASSIFICATION OF
CRITICAL: NONE
VALUE:

REVISIONS

| REV | DESCRIPTION | DATE | APPROVAL |
|---|---|---|---|
| A | SEE EOR FOR DETAIL | 1/2/94 | |

CAD MAINTAINED. CHANGES MUST BE INCORPORATED BY THE DESIGN ACTIVITY.

NOTES:

1. INTERPRET DRAWING IN ACCORDANCE WITH STD 100 AND SMS-STD-00-002

CHECK 2 MATERIAL: PLASTIC SHEET AND FILM, CELLULOSE ACETATE IN ACCORDANCE WITH L-P-506, TYPE I, CLASS 210 STOCK THICKNESS

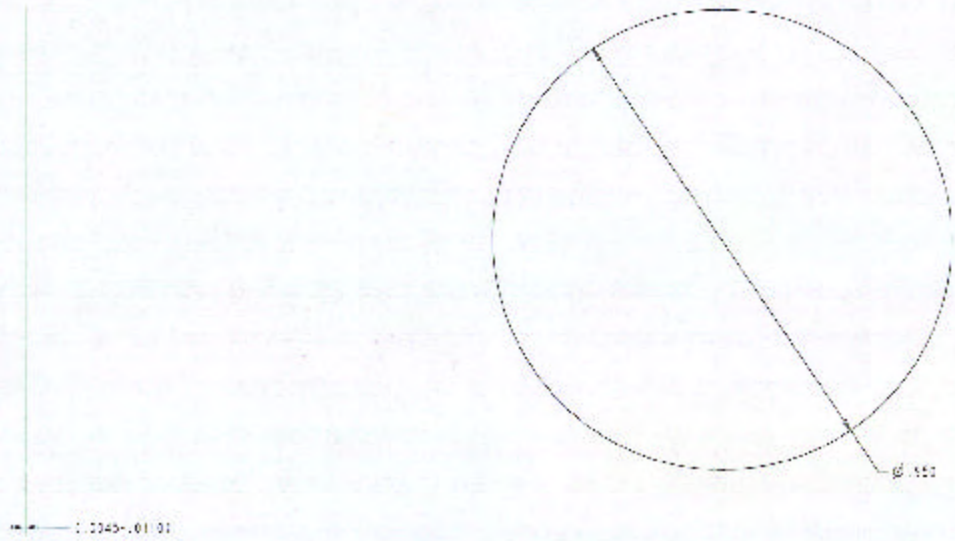


DISTRIBUTION STATEMENT C: Distribution authorized to U.S. Government agencies and their contractors only; critical technology; 1-93. Other requests for this document shall be referred to Commander, Indian Head Division, Naval Surface Warfare Center, Indian Head, MD 20640-5035.

| | |
|---|---|
| 944AS220 | 944AS223 |
| 944AS221 | 944AS217 |
| NEXT ASSY | USED ON |
| APPLICATION | |

UNLESS OTHERWISE SPECIFIED DIMENSIONS ARE IN INCHES
GENERAL TOLERANCES
XX DECIMALS ± 0.01
XXX DECIMALS ± 0.005
ANGLES ±
MATERIAL:
DO NOT SCALE DRAWING

INDIAN HEAD DIVISION
NAVAL SURFACE WARFARE CENTER
INDIAN HEAD, MD 20640-5035

ENGINEER
ENGINEER
CHECKED
DRAWN
APPROVED FOR
DATE

AUTHENTICATED 3/4/94

DEPARTMENT OF THE NAVY
NAVAL AIR SYSTEMS COMMAND
PATUXENT RIVER, MD 20670-1628

DISK, CLOSURE

| SIZE | CAGE CODE | DRAWING NUMBER |
|---|---|---|
| D | 30003 | 944AS217 |

SCALE: NONE SHEET 1 OF 1

CLASSIFICATION OF CHARACTERISTICS (DOD-STD-100C)

| | |
|---|---|
| CR | CAL |
| MA | [illegible] |
| MINOR | ALL OTHER CHARACTERISTICS |

REVISIONS

| REV | DESCRIPTION | DATE | APPROVAL |
|---|---|---|---|
| A | [illegible] STOP RUN | [illegible] | [illegible] |
| B | PER ECO [illegible] | [illegible] | [illegible] |

CAD MODEL DATA-ONLY CHANGES SHALL BE INCORPORATED IN THE DESIGN ACTIVITY

NOTES

1. INTERPRET DRAWING IN ACCORDANCE WITH MIL-STD-100 AND ANSI Y14.5M-1982.
2. REMOVE ALL BURRS, BREAK SHARP CORNERS .015 - .020 EXCEPT WHERE SPECIFIED. FILLETS .005 - .025 EXCEPT WHERE SPECIFIED. SURFACE FINISH: 63/ EXCEPT WHERE SPECIFIED.
3. PASSIVATE IN ACCORDANCE WITH QQ-P-35, TYPE II.
4. MATERIAL: CRES 303 CONVERTED ON A PER ASTM A-582

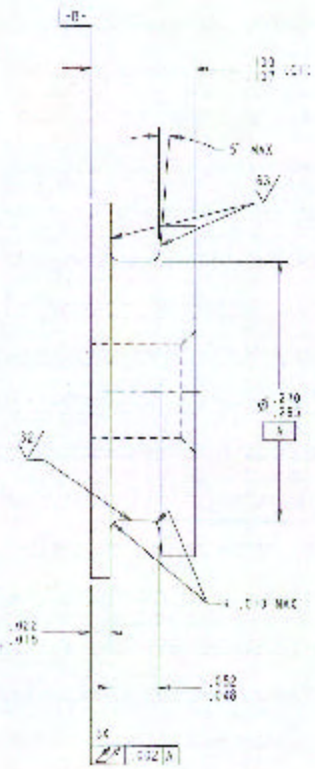


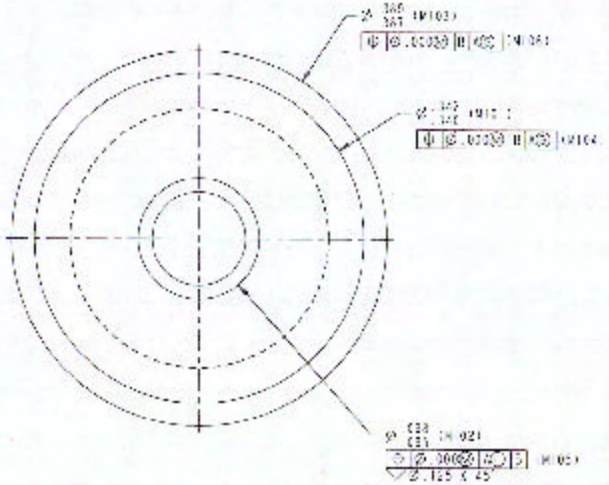


DISTRIBUTION STATEMENT C: Distribution authorized to U.S. Government agencies and their contractors; administrative or operational use; [illegible]. Other requests for this document shall be referred to Commander, Indian Head Division, Naval Surface Warfare Center, Indian Head, MD 20640-5035.

| | |
|---|---|
| 944A022 | 944A021 |
| 944A020 | 944A019 |
| NEXT ASSY | USED ON |

KIT CATION

UNLESS OTHERWISE SPECIFIED DIMENSIONS ARE IN INCHES

GENERAL TOLERANCES

XX DEC MAX ± 1.31

XXX DEC MAX ± 1.303

ANGLES ± 1.0°

MUST ★ 1

DO NOT SCALE DRAWING

INDIAN HEAD DIVISION
NAVAL SURFACE WARFARE CENTER
INDIAN HEAD, MD 20640-5035

| | | |
|---|---|---|
| ENGINEER | | |
| ENGINEER | | |
| CHECKED | | |
| DRAWN | | |
| APPROVED FOR | | DATE |

AUTHENTICATED

DEPARTMENT OF THE NAVY
NAVAL AIR SYSTEMS COMMAND
PATUXENT RIVER, MD 20670-1928

STOP, FIRING PIN

| SIZE | CAGE CODE | DRAWING NUMBER |
|---|---|---|
| D | 30003 | 944AS219 |

SCALE: 1:1 | SHEET 1 OF 1

| CLASSIFICATION OF CHARACTERISTICS (DOD-STD-2101) | |
|---|---|
| CRITICAL | NONE |
| MAJOR | |
| MINOR | ALL OTHER CHARACTERISTICS |

| REVISIONS | | | |
|---|---|---|---|
| REV | DESCRIPTION | DATE | APPROVAL |
| D | SUB CCP 30012-2 NO | 8/26/93 | S FLEDGER |
| E | UPGRADE WITH CHANGE, SEE ECP 30134-S1R2A | 8/24/94 | |

CAD MAINTAINED. CHANGES SHALL BE INCORPORATED BY THE DESIGN ACTIVITY

NOTES:

1. INTERPRET DRAWING IN ACCORDANCE WITH ASME Y14.5M- 994 AND ASME Y14.100-2030 WITH APPENDICES B, C, D, AND E.
2. LETTERING TO BE VERTICAL, GOTHIC, CAPITAL.
3. COLOR: LETTERS AND BLOCKS- WHITE, NO. 37875, EXCEPT "EXPLOSIVE ORDNANCE" RED, NO. 31136. BACKGROUND BLACK, NO. 37038. COLOR NUMBERS IN ACCORDANCE WITH FED STD 595B(1).
4. BLOCK LENGTHS APPROXIMATELY AS SHOWN.
5. MATERIAL: VINYL FILM PER DRAWING 30003-4904162. (INDEX 5)
6. BLOCKS 1, 2, 3, 7, 8, AND 9 TO BE FILLED IN BY SUPPLIER OF LABEL AS SPECIFIED IN TABULATION BLOCK. BLOCKS 4, 5, AND 6 TO BE FILLED IN BY THE ROCKET MOTOR MANUFACTURER.

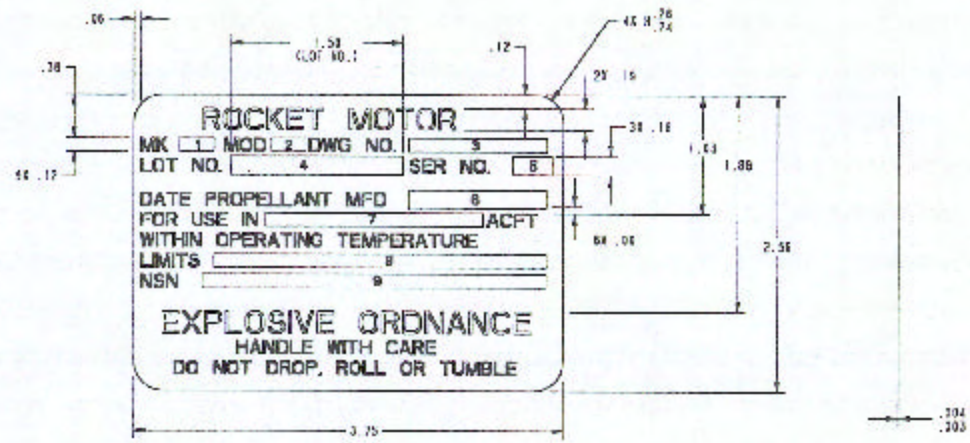


| INDEX NO | BLOCK 1 MK | BLOCK 2 MOD | BLOCK 3 DWG NO. | BLOCK 7 AIRCRAFT | BLOCK 8 TEMP LIMITS | BLOCK 9 NSN-DODIC |
|---|---|---|---|---|---|---|
| | | | | | | |
| | | | | | | |
| -3 | 82 | 0 | 844AS300 | S-3, A-4, A-7 | -40° TO 160°F | 1371-00-119-2337-N878 |
| -4 | 84 | 1 | 503AS302 | S-3 | -40° TO 160°F | 1371-00-107-8101-NF57 |
| -5 | 50 | 0 | 870AS300 | S-3 | 40° TO 160°F | 1371-00-201-5534-NC51 |
| -6 | 139 | 0 | 507AS300 | FA-18 | 65° TO 165°F | 1371-00-101-1443-NF56 |
| -7 | 84 | 2 | 503AS300 | S-3 | 40° TO 160°F | 1371-00-195-6315-NF57 |
| -8 | 82 | 1 | 844AS312 | S-3, A-4, A-7 | -40° TO 160°F | 1371-00-412-0352-NU15 |
| -9 | 50 | 1 | 870AS301 | S-3 | -40° TO 160°F | 1371-00-412-0492-NU15 |
| -10 | 139 | 1 | 507AS320 | FA-18 | -65° TO 165°F | 1371-00-451-532[illegible]-5367 |

DISTRIBUTION STATEMENT C: Distribution authorized to U.S. Government agencies and their contractors administrative or operational use, 2-1-93. Other requests for this document shall be referred to Commander, Indian Head Division, Naval Surface Warfare Center, Indian Head, MD 20640-5035.

| | | |
|---|---|---|
| 1587N507 | ELT 5974278 | |
| 1587N5106 | ELT 5974278 | |
| 5934280 | 3L6234S100 | |
| 5934280 | 3L6234S107 | |
| 5934280 | 3L6234S101 | |
| 8444S211 | 3L6444S112 | |
| 8444S100 | 3L6444S100 | |
| 8444S100 | 3L6444S100 | |
| NEXT ASSY | USED ON | |
| APPLICATION | | |

UNLESS OTHERWISE SPECIFIED DIMENSIONS ARE IN INCHES
GENERAL TOLERANCES
XX DEC MALS ± 0.02
XXX DEC MALS ± —
ANGLES ± —

DO NOT SCALE DRAWING

INDIAN HEAD DIVISION
NAVAL SURFACE WARFARE CENTER
INDIAN HEAD, MD 20640-5035

ENG MGR
ENG MGR
CHECKED
DRAWN
APPROVED FOR USE BY
DATE

AUTHENTICATED 3/25/94

DEPARTMENT OF THE NAVY
NAVAL AIR SYSTEMS COMMAND
WASHINGTON, D.C. 20361

LABEL, IDENTIFICATION
ROCKET MOTOR

| SIZE | CAGE CODE | DRAWING NUMBER |
|---|---|---|
| D | 30003 | 4904217 |

SCALE: NONE | SHEET 1 OF

NOTES:

1. THIS PART IS MANUFACTURED IN ACCORDANCE WITH MIL-STD-100.
2. SURFACE ROUGHNESS 250 UNLESS OTHERWISE SPECIFIED.
3. MACHINE FILLET RADII .015-.030.
4. REMOVE BURRS AND SHARP EDGES .005-.010.
5. PART SHALL BE ENGRAVED IN ACCORDANCE WITH MIL-P-15, METHOD I, AND PACKAGE IDENTIFIED IN ACCORDANCE WITH MIL-M-81128, METHOD A, TYPE I.

CLASSIFICATION OF CHARACTERISTICS (DOD-STD-2101)

| | |
|---|---|
| CR | CAT. |
| MA | 100 |
| MINOR | ALL OTHER CHARACTERISTICS |

REVISIONS

| REV | DESCRIPTION | DATE | APPROVED |
|---|---|---|---|
| A | INITIAL RELEASE | 8-1-75 | [illegible] |
| B | SEE ECN 944AS108-A | 8-7-75 | [illegible] |
| C | SEE ECN 944AS108-B | 8-12-75 | [illegible] |
| D | SEE ECN 944AS108-C | 8-12-75 | [illegible] |
| E | SEE ECN 944AS108-D | 1-10-92 | [illegible] |

ECO MAINTENANCE CHANGES SHALL BE INCORPORATED BY THE DESIGN ACTIVITY

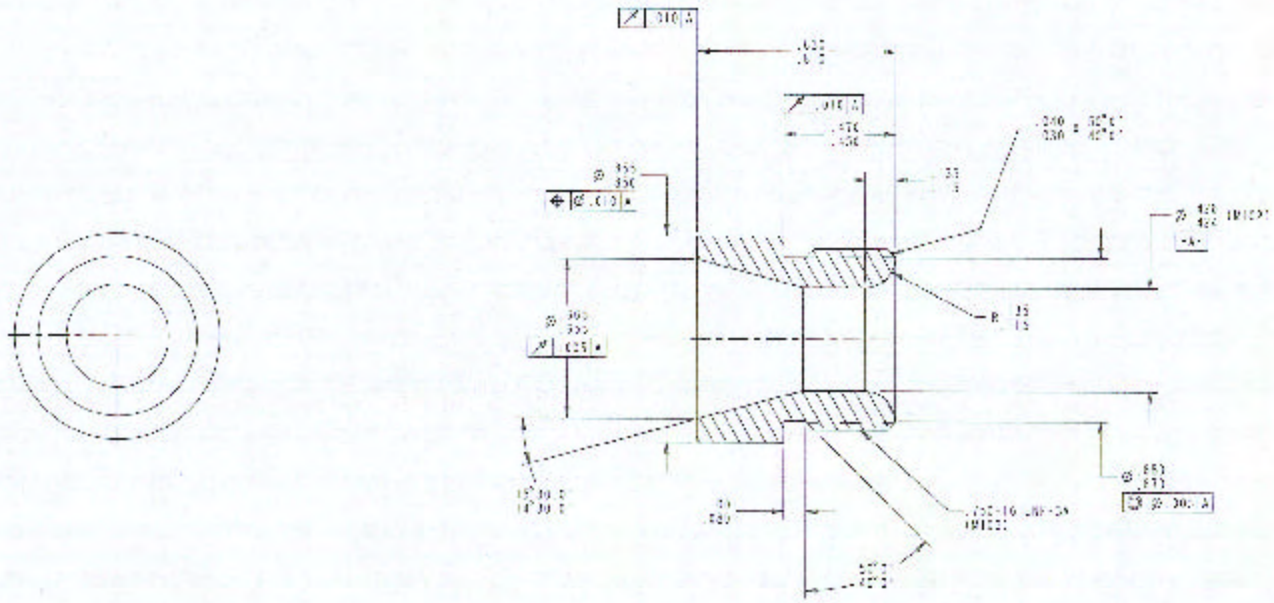

DISTRIBUTION STATEMENT C: Distribution authorized to U.S. Government agencies and their contractors; administrative or operational use, 7-1-95. Other requests for this document shall be referred to Commander, Indian Head Division, Naval Surface Warfare Center, Indian Head, MD 20640-5035.

UNLESS OTHERWISE SPECIFIED DIMENSIONS ARE IN INCHES
GENERAL TOLERANCES
XX DECIMALS ±
XXX DECIMALS ±
ANGLES ±

NOTES:
MATERIAL MIL-M-11502, C, 2, FINISH METHOD 4-18

| | |
|---|---|
| 944AS 8 | 0197945 EA |
| 944AS 8 | 0197944 EA |
| NEXT ASSY | USED ON |

APPL CATEGORY

DO NOT SCALE DRAWING

INDIAN HEAD DIVISION
NAVAL SURFACE WARFARE CENTER
INDIAN HEAD, MD 20640-5035

ENG MGR
ENG MGR
CHECKED
DRAWN
APPROVED FOR
DATE

AUTHENTICATED 12-1-92

DEPARTMENT OF THE NAVY
NAVAL AIR SYSTEMS COMMAND
PATUXENT RIVER, MD 20670-1620

INSERT, NOZZLE

| SIZE | CAGE CODE | DRAWING NUMBER |
|---|---|---|
| D | 30003 | 944AS109 |

SCALE 1:1 (NA) SHEET 1 OF 1

| CLASSIFICATION OF CHARACTERISTICS (DOD-STD-2101) | |
|---|---|
| CRITICAL - | NONE |
| MAJOR - | 9 |
| MINOR - | ALL OTHER CHARACTERISTICS |

| REVISIONS | | | |
|---|---|---|---|
| REV | DESCRIPTION | DATE | APPROVAL |
| A | SEE NCR 988AS150-A | 11/16/88 | P. L. Stang |
| B | SEE NCR 988AS150-B | 11/16/88 | P. L. Stang |
| C | STD TOP 95 STYLE CHANGE | 11/14/94 | [illegible] |
| D | REDRAWN & REVISED, SEE ECP 98020-[illegible] | 6/8/98 | [illegible] |

DWG MAINTAINED. CHANGES SHALL BE INCORPORATED BY THE DESIGN ACTIVITY

NOTES:

1. INTERPRET DRAWING IN ACCORDANCE WITH ASME Y14.5M-994 AND ASME Y14.100-2000 WITH APPENDICES B, C, D AND E.

2. THIS DRAWING PROVIDES THE AEROSPACE MANUFACTURER WITH THE MATERIAL, UNINSTALLED ITEM AGE CONTROL, PROCUREMENT, STORAGE, AND INSPECTION REQUIREMENTS FOR O-RINGS THAT PERFORM A SEALING FUNCTION IN NON-RATED AEROSPACE APPLICATIONS. REQUIREMENTS FOR OTHER O-RINGS USED IN AEROSPACE APPLICATIONS SHALL BE SPECIFIED WITH MIL-PRF-9024 OR COMMERCIAL STANDARDS. FOR GENERAL GUIDANCE ON DESIGN CONSIDERATIONS, REFER TO PARKER O-RING HANDBOOK ORD 5700.

3. THE DEFINITION AND REQUIREMENT FOR CURE DATE, MARKING, AGE, AND UNINSTALLED ITEM AGE CONTROL AS SPECIFIED IN MIL-STD-1523A SECTION 5.5, 5.5.1, AND 5.5.2, SHALL APPLY.

4. SPECIFIC O-RING SIZES ARE SPECIFIED IN THE "DESCRIPTION BLOCK" ON APPLICABLE SUBASSEMBLY AND ASSEMBLY DRAWINGS, AND ARE LISTED AS "O-RING, SIZE "XXXX DWG". FOR EXAMPLE: THE DIMENSIONS OF THE O-RINGS ARE FOUND IN XXXXB.

5. SPECIFIC O-RINGS MATERIALS ARE SPECIFIED IN THE "PART NO. BLOCK" ON THE APPLICABLE SUBASSEMBLY AND ASSEMBLY DRAWINGS, AND ARE LISTED AS "988AS150-2", FOR EXAMPLE. THE MATERIAL "DASH NO." REFERS TO THE TABLE ON THIS DRAWING.

6. THE MATERIALS DASH NO. 3 THRU 4 ARE INTERCHANGEABLE

7. BASE POLYMER IS A MAJOR CHARACTERISTIC WHERE SPECIFIED.

8. THE FOLLOWING CONDITIONS SHALL BE MET:

(MIL)8a. CERTIFIED BATCH INFORMATION - CERTIFIED BATCH INFORMATION SHALL BE PROVIDED BY THE ORIGINAL MANUFACTURER FOR EACH BATCH OF O-RINGS ORDERED. THIS INFORMATION SHALL INCLUDE: MANUFACTURER'S NAME, BATCH NUMBER, CURE DATE, CERTIFICATE OF COMPLIANCE FOR THE MATERIAL, O-RING COMPOUND NUMBER, AND BASE POLYMER WITH APPLICABLE HARDNESS, PERCENT ELONGATION, AND TENSILE STRENGTH.

(MIL)8b. THE O-RINGS SHALL BE PACKAGED IN ACCORDANCE WITH MIL-P-116, METHOD II, PREFERABLY IN AN OPAQUE VACUUM SEALED BAG. VACUUM BAG MIL-P-116, SECTION 3.10; HEAT SEAL BAG MIL-P-116J, SECTION 3.1. THERE SHALL BE ONLY ONE DASH NO. OF O-RINGS IN ANY BAG, AND A MAXIMUM OF 50 O-RINGS PER BAG.

c. LABELING REQUIREMENTS - EACH BAG OF O-RINGS SHALL BE LABELED WITH THE ORIGINAL MANUFACTURER, O-RING TYPE/DESIGNATION, BATCH NUMBER, CURE DATE, AND QUANTITY.

(MIL)8d. PROCUREMENT AGE REQUIREMENT - MAXIMUM ALLOWABLE TIME FOR DELIVERY OF O-RINGS, FROM CURE DATE, SHALL NOT EXCEED ONE YEAR

(MIL)8e. STORAGE CONDITIONS -
1. AMBIENT TEMPERATURE NOT EXCEEDING 120°F
2. EXCLUSION OF AIR/OXYGEN.
3. a. COMPLIANCE WITH NOTE 8e. FULFILLS THIS REQUIREMENT
3. EXCLUSION OF CONTAMINATION
4. EXCLUSION OF LIGHT, PARTICULARLY SUNLIGHT.
5. EXCLUSION OF OZONE GENERATING ELECTRICAL DEVICES
6. EXCLUSION OF RADIATION.

(MIL)8f. IF O-RINGS ISSUED TO PRODUCTION ARE RETURNED TO STORAGE, THEY SHALL MEET THE PACKAGING REQUIREMENTS OF NOTE 8.b. IF THE ORIGINAL BAG WAS NOT OPENED, THE MAXIMUM UNINSTALLED ITEM AGE OF THE TABLE REMAINS IN EFFECT. IF THE ORIGINAL BAG WAS OPENED AND RESEALED, A MAXIMUM UNINSTALLED ITEM AGE OF ONE YEAR FROM THE DATE THE BAG WAS OPENED SHALL APPLY, PROVIDED THAT:
a. THE STORAGE CONDITIONS OF NOTES 8.e.1.-6. AND 8.g.1-3 WERE MET WHILE THE BAG WAS OPENED.
b. THE BAG WAS NOT OPENED FOR MORE THAN 60 DAYS.
c. THE MAXIMUM UNINSTALLED ITEM AGE IS NOT EXCEEDED.

(MIL)8g. VISUAL INSPECTION OF ELASTOMERIC O-RINGS SHALL BE IN ACCORDANCE WITH MIL-STD-413.

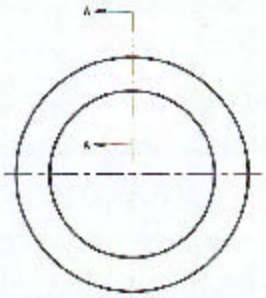


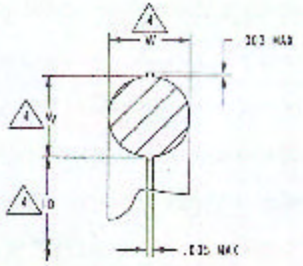


ENLARGED SECTION
A-A

| DASH NO. | ELASTOMER TYPE | ELASTOMER IN ACCORDANCE WITH (NOTE 7) | MAXIMUM UNINSTALLED ITEM AGE-YEARS (NOTE 2) | RECOMMENDED TEMP RANGE (DEGREES F) | SERIES DESIGNATED ON DRAWING TO BE REPLACED | BASE POLYMER (NOTE 1) |
|---|---|---|---|---|---|---|
| -1 | NITRILE (Buna N) | MIL-P-83461 | 3 | -65° TO 225° | MS28775 | — |
| -2 | NITRILE (Buna N) | MIL-P-3515 | 3 | -73° TO 160° | MS29513 | — |
| -3 | NITRILE (Buna N) | MIL-R-7592 TYPE I | 3 | 55° TO 180° | MS29561 | — |
| -4 | NITRILE (Buna N) | AMS7271 | 3 | -73° TO 180° | MS9021 | — |
| 5 | SILICONE | AMS3304 | 5 | -65° TO 450° | MS9036 | PARKER SEAL COMPOUND S634-70 |
| -6 | FLUOROCARBON | MIL-R-83248 TYPE I | 4 | -15° TO 400° | MS32487 | — |
| -7 | HIGH STRENGTH SILICONE | ZZ-R-765 CLASS 30 GRADE 70 | 5 | -94° TO 392° | NONE | DOW CORNING SILASTIC 750 |
| -8 | EPTHYLENE PROPYLENE | MAS1613 | 4 | -73° TO 300° | MAS1611/1612 | — |

DISTRIBUTION STATEMENT C: Distribution authorized to U.S. Government agencies and their contractors administrative or operational use, 7-1-93. Other requests for this document shall be referred to Commander, Indian Head Division, Naval Surface Warfare Center, Indian Head, MD 20640-5035.

| | | |
|---|---|---|
| UNLESS OTHERWISE SPECIFIED DIMENSIONS ARE IN INCHES. GENERAL TOLERANCES: XX DECIMALS ± —; XXX DECIMALS ± —; ANGLES ± — | INDIAN HEAD DIVISION NAVAL SURFACE WARFARE CENTER INDIAN HEAD, MD 20640-5035 | DEPARTMENT OF THE NAVY NAVAL AIR SYSTEMS COMMAND PATUXENT RIVER, MD 20670-1620 |
| MATERIAL: — | ENGINEER / ENGINEER / CHECKED / DRAWN | SEALS, O-RING |
| NEXT ASSY / USED ON | APPROVED FOR NAVAL AIR SYSTEMS COMMAND — DATE | SIZE D; CAGE CODE 30003; DRAWING NUMBER 988AS150 |
| APPLICATION | DO NOT SCALE DRAWING | SCALE: NONE; SHEET 1 OF 1 |

AUTHENTICATED 3/16/99