REVISIONS			APPROVALS			
ZONE	LTR	DESCRIPTION	DIV HD	DATE	SAFETY	DATE

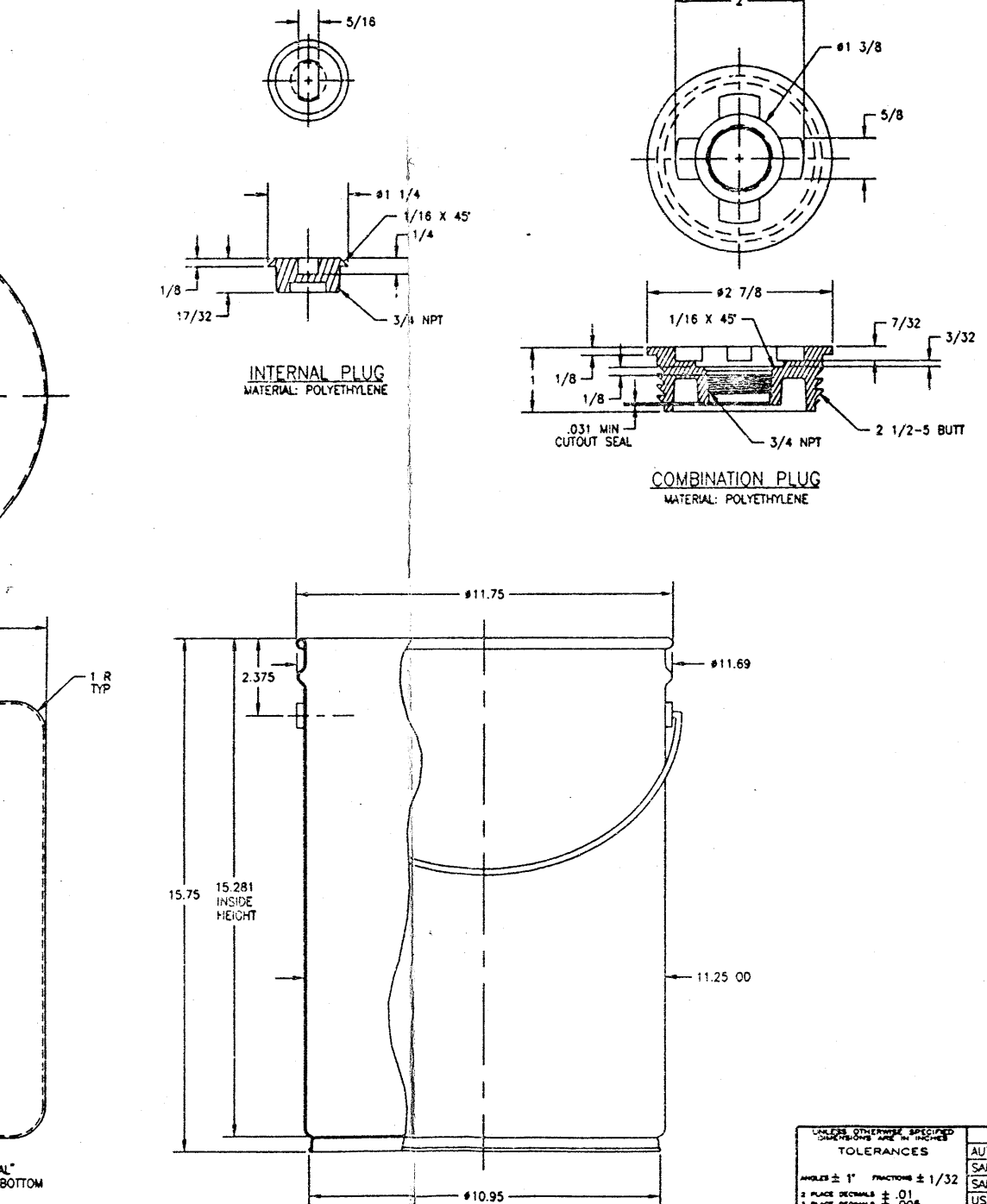

NOTES

1. POLYETHYLENE INSERT
   - A. THE INSERT SHALL BE IN ACCORDANCE WITH BUREAU OF EXPLOSIVES TARIFF NUMBER 6000, REVISION L, SECTION 178.522.
   - B. THE INSERT SHALL HAVE ONE INTEGRALLY MOLDED FLANGE OPENING.
   - C. THE FLANGE SHALL BE THREADED INTERNALLY WITH 2 1/2 INCH (NOMINAL) BUTRESS TYPE THREADS.
   - D. THE PLUG FOR EACH OPENING SHALL BE A COMBINATION PLUG WITH A 3/4 INCH NPT INTERNAL PLUG. THE 3/4 INCH CENTER HOLE SHALL HAVE A SOLID (CUTOUT) SEAL MOLDED IN THE BASE. THE PLUG ASSEMBLY SHOWN IS KNOWN AS AN AMERICAN BUTTRESS PLUG (2" NOMINAL).
   - E. THE SEAL SHALL NOT INTERFERE WITH THE SEATING OF THE 3/4 INCH PLUG.
   - F. THE COMBINATION PLUG SHALL HAVE A COMPRESSIBLE POLYETHYLENE FLAT TYPE GASKET TO PREVENT LEAKAGE.
   - G. THE DIMENSIONS OF THE INSERT SHALL BE AS INDICATED.
2. STEEL PAIL
   THE PAIL SHALL BE IN ACCORDANCE WITH BUREAU OF EXPLOSIVES TARIFF NUMBER 6000, REVISION L, SECTION 178.522 WITH THE FOLLOWING EXCEPTIONS AND ADDED REQUIREMENTS.
   - A. THERE SHALL BE NO WEEP HOLES.
   - B. THE REMOVABLE TOP HEAD SHALL HAVE NO HOLES.
   - C. THE REMOVABLE TOP HEAD CLOSURE RING SHALL BE THE BOLT RING CLOSURE TYPE.
   - D. THE DIMENSIONS OF THE PAIL SHALL BE AS INDICATED.
   - E. EXTERIOR PAINT OF THE PAIL & REMOVABLE TOP HEAD SHALL BE BLACK ENAMEL IN ACCORDANCE WITH TT-E-2784, TYPE II, COLOR NUMBER 27038.
   - F. EMBOSS THE FOLLOWING IN ACCORDANCE WITH MIL-STD-130 IN 1/2 INCH CHARACTERS MINIMUM.
     DWG 950-Y-054
   - G. THE REMOVABLE TOP HEAD SHALL BE PROVIDED WITH A GASKET OF SILICONE OR NATURAL RUBBER IN ACCORDANCE WITH MIL-R-3065.
3. FINISHED ASSEMBLY SHALL BE TESTED IN ACCORDANCE WITH BUREAU OF EXPLOSIVES SECTION 178.500, PERFORMANCE ORIENTED PACKAGING, UN TESTING REQUIREMENTS TO MEET PACKING GROUP II WITH A SPECIFIC GRAVITY OF NO GREATER THAN 1.8. THE FINISHED ASSEMBLY SHALL BE MARKED IN ACCORDANCE WITH BUREAU OF EXPLOSIVES SECTION 178.600.
4. REUSE, RECONDITIONING, AND REMANUFACTURE IS PROHIBITED.

UNLESS OTHERWISE SPECIFIED DIMENSIONS ARE IN INCHES
TOLERANCES
ANGLES ± 1° FRACTIONS ± 1/32
2 PLACE DECIMALS ± .01
3 PLACE DECIMALS ± .005

APPROVALS			
AUTHORITY	NAME	CODE	DATE
SAFETY DIV			
SAFETY CHK	E.WALSEMAN	0410	9/27/95
USER DIV	D.CLARK	250	7/24/95

NAVAL SURFACE WARFARE CENTER
INDIAN HEAD DIVISION
INDIAN HEAD, MD 20640