CLASSIFICATION OF CHARACTERISTICS (DOD-STD-2101)	
CRITICAL-	NONE
MAJOR-	9
MINOR-	ALL OTHER CHARACTERISTICS

REVISIONS			
REV	DESCRIPTION	DATE	APPROVAL

CAD MAINTAINED, CHANGES SHALL BE INCORPORATED BY THE DESIGN ACTIVITY

NOTES:

1. INTERPRET DRAWING IN ACCORDANCE WITH ASME Y14.5M-1994 AND ASME Y14.100-2000 WITH APPENDICES B, C, D, AND E.

(M101) 2. MAKE FROM DRAWING 10551420.

3. UNLESS OTHERWISE SPECIFIED, SURFACE ROUGHNESS MUST BE 125 OR BETTER.

(M102) 4. FINAL PROTECTIVE FINISH IN ACCORDANCE WITH SAE AMS QQ-P-416A, TYPE II, CLASS 3. ALL SURFACE SHALL HAVE A MINIMUM PLATING THICKNESS OF .0001 INCH. SURFACES THAT CAN BE TOUCHED BY A .75 INCH DIAMETER BALL SHALL MEET THE PLATING REQUIREMENTS OF SAE AMS QQ-P-416A, TYPE II, CLASS 3.

5. DIMENSIONAL LIMITS APPLY AFTER PLATING.

6. UNLESS OTHERWISE SPECIFIED, REMOVE BURRS, BREAK SHARP EDGES .005-.020, FILLETS .020 MAX.

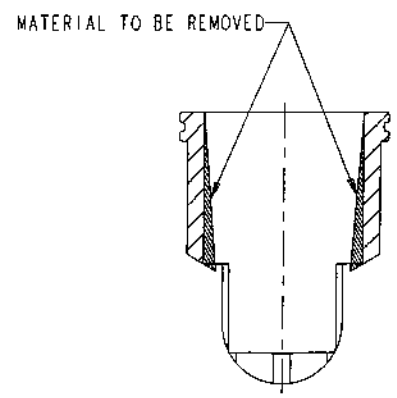

SECTION A-A

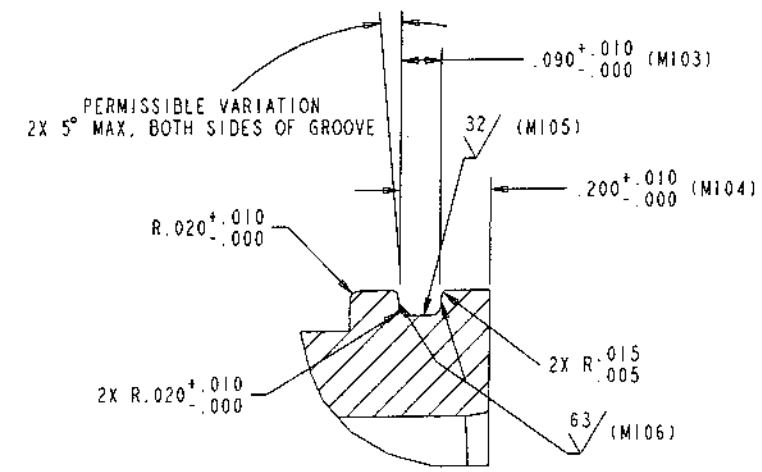

DETAIL C

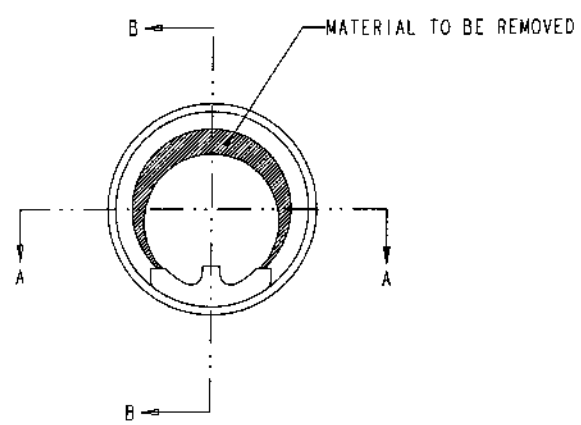

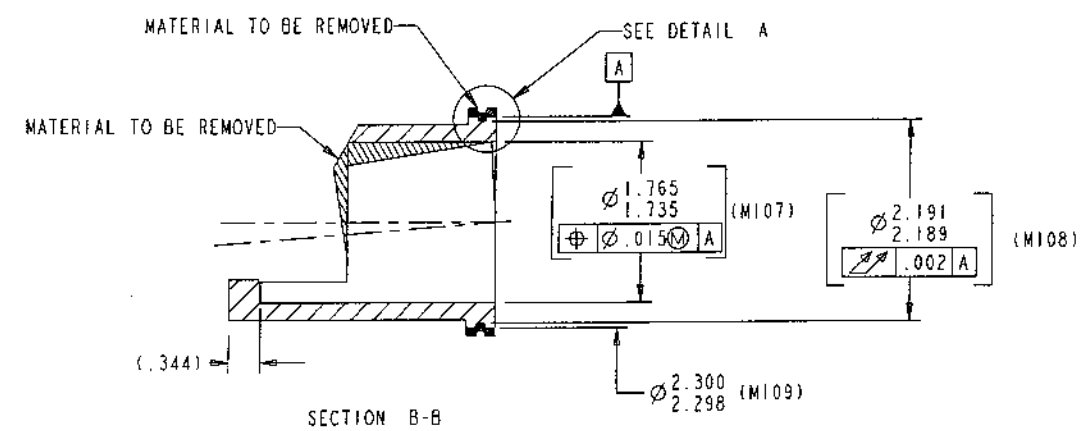

SECTION B-B

DISTRIBUTION STATEMENT C: Distribution authorized to U.S. Government agencies and their contractors administrative or operational use, 7-1-93. Other requests for this document shall be referred to Commander, Indian Head Division, Naval Surface Warfare Center, Indian Head, MD 20640-5035.

512-174-0110	DL11820361
NEXT ASSY	USED ON
APPLICATION	

UNLESS OTHERWISE SPECIFIED DIMENSIONS ARE IN INCHES
GENERAL TOLERANCES
XX DECIMALS ± —
XXX DECIMALS ± —
ANGLES ± —
MATERIAL: 2
DO NOT SCALE DRAWING

INDIAN HEAD DIVISION
NAVAL SURFACE WARFARE CENTER
INDIAN HEAD, MD 20640-5035

ENGINEER		
ENGINEER	[illegible]	5/22/03
CHECKED	[illegible]	5/22/03
DRAWN	[illegible]	5/15/03
APPROVED FOR NSWCIH		DATE
	[illegible]	5/23/03

DEPARTMENT OF THE NAVY
NAVAL SURFACE WARFARE CENTER
INDIAN HEAD, MARYLAND 20640-5035

SLEEVE, MODIFIED PART

SIZE	CAGE CODE	DRAWING NUMBER
D	14083	512-174-0105
SCALE: NONE		SHEET 1 OF 1