| CLASSIFICATION OF CHARACTERISTICS (DOD-STD-2101) | |
|---|---|
| CRITICAL- | NONE |
| MAJOR- | 8 |
| MINOR- | ALL OTHER CHARACTERISTICS |

| REVISIONS | | | |
|---|---|---|---|
| REV | DESCRIPTION | DATE | APPROVAL |
| | | | |

NOTES

1. INTERPRET DRAWING IN ACCORDANCE WITH ASME Y14.5M-1994 AND ASME Y14.100-2000 WITH APPENDICES B, C, D, AND E.

(M101) 2. MAKE FROM 10551418.

(M102) 3. FINAL PROTECTIVE FINISH IN ACCORDANCE WITH SAE AMS QQ-P-416A, TYPE II, CLASS 2. ALL SURFACES SHALL HAVE A MINIMUM PLATING THICKNESS OF .0001 INCH. SURFACES THAT CAN BE TOUCHED BY A .75 INCH DIAMETER BALL SHALL MEET THE PLATING THICKNESS REQUIREMENTS OF SAE AMS QQ-P-416A, TYPE II, CLASS 2.

4. DIMENSIONAL LIMITS APPLY AFTER PLATING.

**CAD MAINTAINED, CHANGES SHALL BE INCORPORATED BY THE DESIGN ACTIVITY**

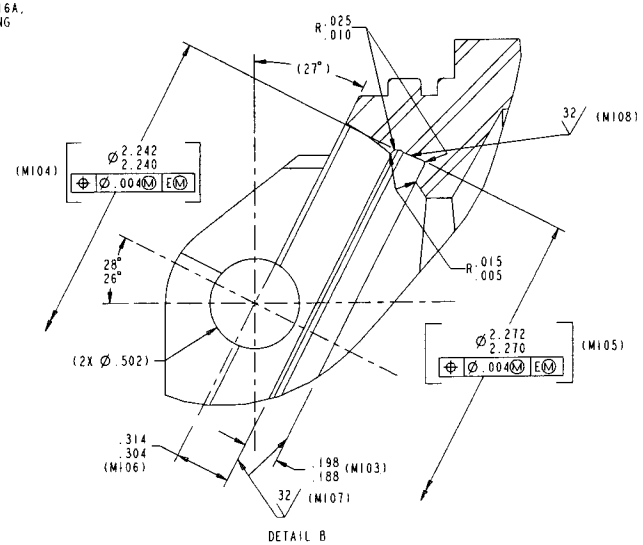


DETAIL B

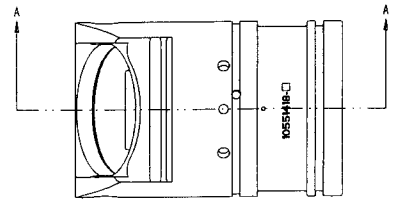


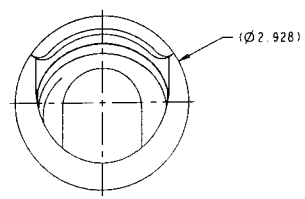


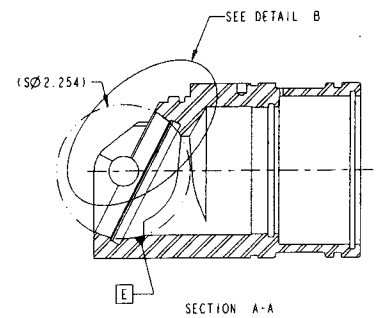


SECTION A-A

## ALTERED ITEM DRAWING

| | | | | |
|---|---|---|---|---|
| 512-174-0110 | 0L11820361 | UNLESS OTHERWISE SPECIFIED DIMENSIONS ARE IN INCHES GENERAL TOLERANCES XX DECIMALS ± — XXX DECIMALS ± — ANGLES ± — | INDIAN HEAD DIVISION NAVAL SURFACE WARFARE CENTER INDIAN HEAD, MD 20640-5035 | DEPARTMENT OF THE NAVY NAVAL SURFACE WARFARE CENTER INDIAN HEAD, MD 20640-5035 |
| NEXT ASSY | USED ON | MATERIAL: 2 | ENGINEER | RETAINER-MODIFIED |
| APPLICATION | | DO NOT SCALE DRAWING | ENGINEER JAP 4/22/03 | |
| | | | CHECKED [signature] 4/22/03 | SIZE D · CAGE CODE 14083 · DRAWING NUMBER 512-174-0102 |
| | | | DRAWN [signature] 4/17/03 | |
| | | | APPROVED FOR NSWC/IH [signature] 4/25/03 | SCALE: NONE · SHEET 1 OF 1 |

**DISTRIBUTION STATEMENT C: Distribution authorized to U.S. Government agencies and their contractors administrative or operational use, 7-1-93. Other requests for this document shall be referred to Commander, Indian Head Division, Naval Surface Warfare Center, Indian Head, MD 20640-5035.**