NOTES:

1. INTERPRET DRAWING IN ACCORDANCE WITH ASME Y14M.5-1994 AND ASME Y14.100-2000 WITH APPENDICES B, C, D, AND E.

(M101) 2. MAKE FROM 10551413.

3. UNLESS OTHERWISE SPECIFIED, REMOVE BURRS, BREAK SHARP EDGES .005-.020. FILLETS .020 MAX.

(M102) 4. AFTER MACHINING, STRIP CADMIUM PLATING AND REPLATE IN ACCORDANCE WITH SAE AMS QQ-P-416A, TYPE II, CLASS 2. ALL SURFACES, REGARDLESS OF CONFIGURATION, SHALL HAVE A MINIMUM PLATING THICKNESS OF .0001 INCH. SURFACES THAT CAN BE TOUCHED BY A .75 INCH DIAMETER BALL, SHALL MEET PLATING THICKNESS REQUIREMENTS OF SAE AMS QQ-P-416A, TYPE II, CLASS 2.

5. DIMENSIONAL LIMITS APPLY AFTER PLATING.

6. UNLESS OTHERWISE SPECIFIED, SURFACE ROUGHNESS MUST BE 125 OR BETTER.

7. THREADS SHALL BE IN ACCORDANCE WITH ASME B1.1-1989.

8. IN APPROXIMATE LOCATION SHOWN, PERMANENTLY APPLY PART NO. "512-174-0092 A" IN .125 INCH HIGH GOTHIC CHARACTERS BY NON-DESTRUCTIVE COMMERCIAL MEANS AFTER APPLICATION OF PROTECTIVE FINISH.

CLASSIFICATION OF CHARACTERISTICS (DOD-STD-2101)	
CRITICAL-	NONE
MAJOR-	4
MINOR-	ALL OTHER CHARACTERISTICS

REVISIONS

REV	DESCRIPTION	DATE	APPROVAL
A	SEE ECP 03024-5120A	8/19/03	C.P. Mayer

CAD MAINTAINED, CHANGES SHALL BE INCORPORATED BY THE DESIGN ACTIVITY

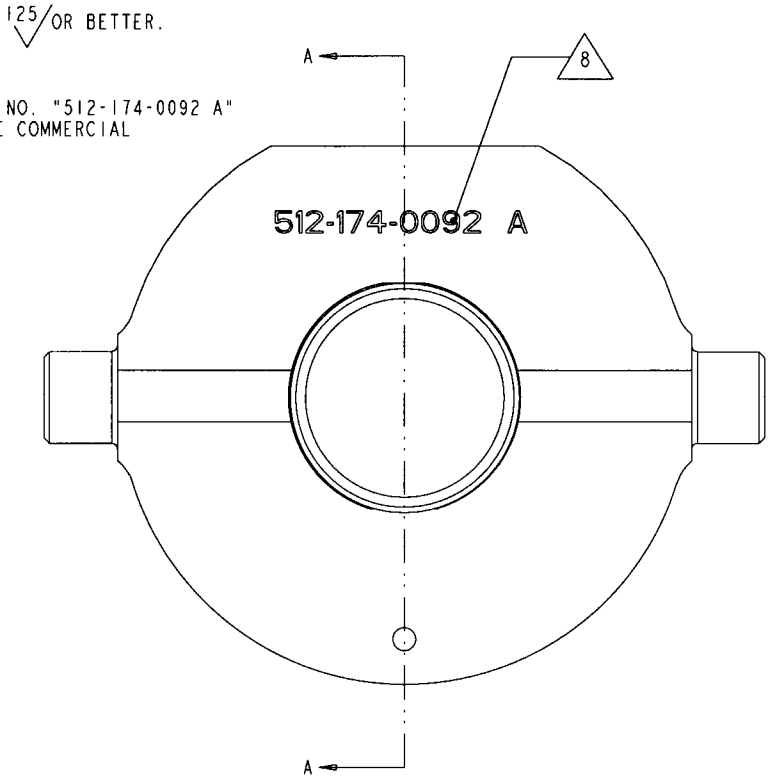

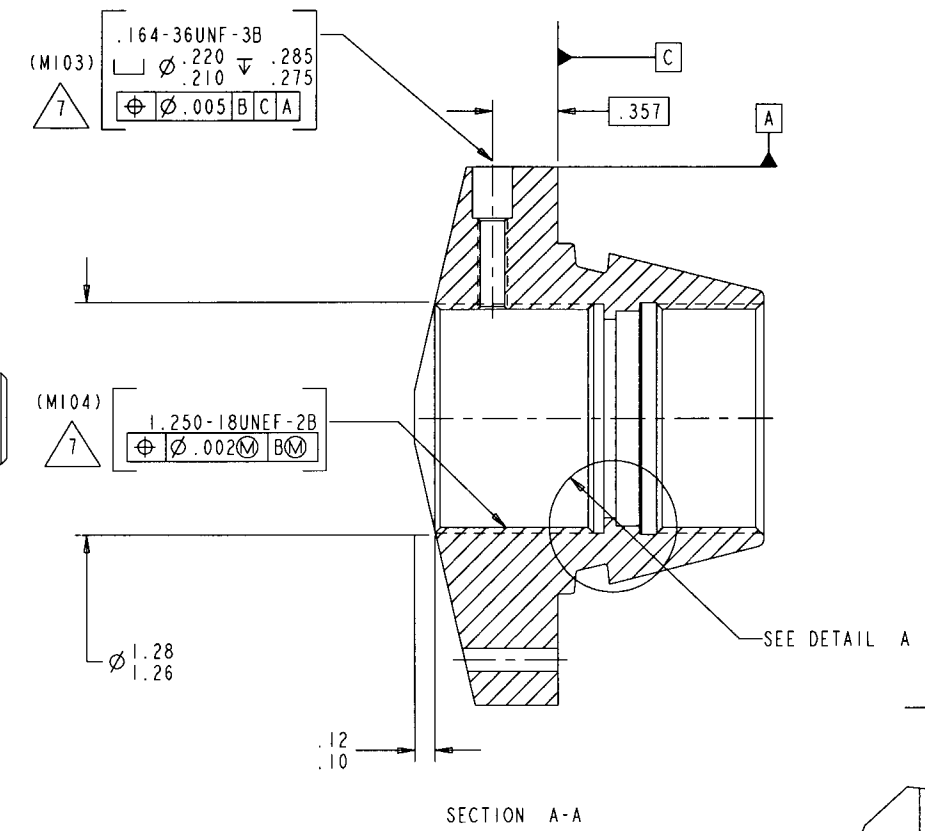

SECTION A-A

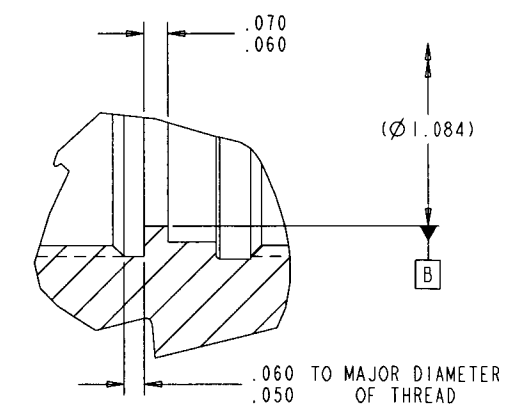

DETAIL A

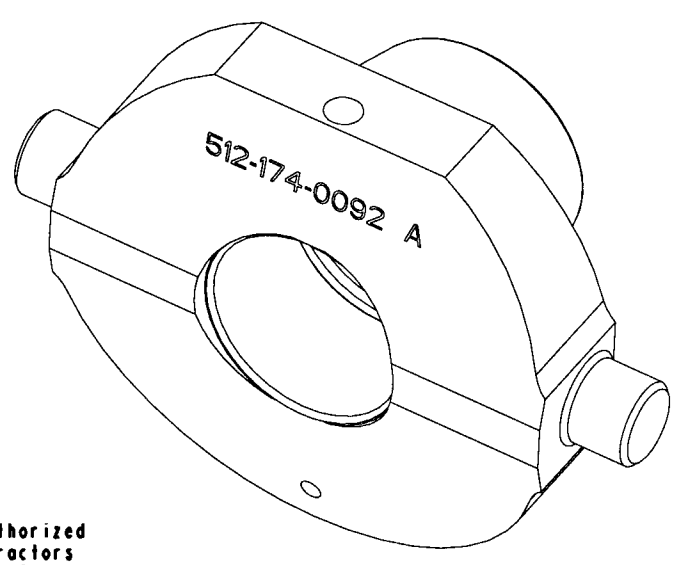

ALTERED ITEM DRAWING

DISTRIBUTION STATEMENT C: Distribution authorized to U.S. Government agencies and their contractors administrative or operational use, 7-1-93. Other requests for this document shall be referred to Commander, Indian Head Division, Naval Surface Warfare Center, Indian Head, MD 20640-5035.

512-174-0110	DL512-174-0110
NEXT ASSY	USED ON
APPLICATION	

UNLESS OTHERWISE SPECIFIED DIMENSIONS ARE IN INCHES
GENERAL TOLERANCES
XX DECIMALS ± —
XXX DECIMALS ± —
ANGLES ± 0.5°

MATERIAL: 2

DO NOT SCALE DRAWING

INDIAN HEAD DIVISION
NAVAL SURFACE WARFARE CENTER
INDIAN HEAD, MD 20640-5035

ENGINEER		
ENGINEER	TAI	03/05/27
CHECKED	EH	03/05/27
DRAWN		03/05/27
APPROVED FOR NSWC/IH		DATE
C.A. PFLEEGOR		03/05/28

AUTHENTICATED 03/05/28

DEPARTMENT OF THE NAVY
NAVAL SURFACE WARFARE CENTER
INDIAN HEAD, MARYLAND 20640-5035

MOUNT-MODIFIED

SIZE	CAGE CODE	DRAWING NUMBER
D	14083	512-174-0092

SCALE: NONE SHEET 1 OF 1