| CLASSIFICATION OF CHARACTERISTICS (DOD-STD-2101) | |
|---|---|
| CRITICAL- | NONE |
| MAJOR- | 4 |
| MINOR- | ALL OTHER CHARACTERISTICS |

| REVISIONS | | | |
|---|---|---|---|
| REV | DESCRIPTION | DATE | APPROVAL |
| | | | |

CAD MAINTAINED, CHANGES SHALL BE INCORPORATED BY THE DESIGN ACTIVITY

NOTES.

1. INTERPRET DRAWING IN ACCORDANCE WITH ASME Y14.5M-1994 AND ASME Y14.100-2000 WITH APPENDICES B, C, D, AND E.

2. FIND NO. 2 AVAILABLE FROM:
   ITW PERFORMANCE POLYMERS CONSUMER DIVISION
   2107 WEST BLUE HERON BLVD.
   RIVIERA BEACH, FL 33404
   1-800-327-6880
   WWW.ITWCONSUMER.COM

3. UNLESS OTHERWISE SPECIFIED, SURFACE ROUGHNESS MUST BE 125/ OR BETTER.

4. NO SHARP EDGE PERMITTED.

(M102) 5. Ø 1.003 / 1.000 AND 32/ APPLY WITHIN 2.60 MIN LENGTH SHOWN.

6. PRIOR TO APPLICATION OF PLASTIC STEEL EPOXY, CHAMFER EDGES TO 46° / 44° X .025 / .015.

(M103) 7. FILL SLOTS WITH PLASTIC STEEL EPOXY, FIND NO. 2, AND ALLOW TO CURE FOR 24 HOURS MINIMUM AT 70° ± 20° F. MACHINE TO SPECIFIED DIMENSIONS.

8. AFTER MACHINING THE LAUNCHER TUBE OUTSIDE DIAMETER, APPLY ZINC CHROMATE PRIMER, FIND NO. 3, TO THE EPOXY SURFACE AND ANY AREAS OF THE LAUNCHER TUBE WHERE THE PLATING IS DAMAGED.

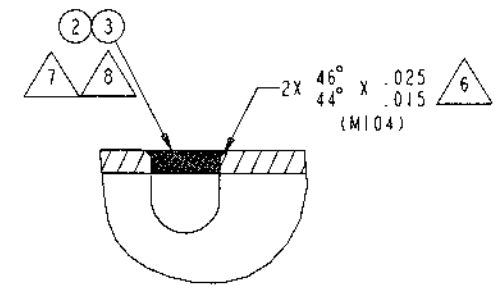


DETAIL A

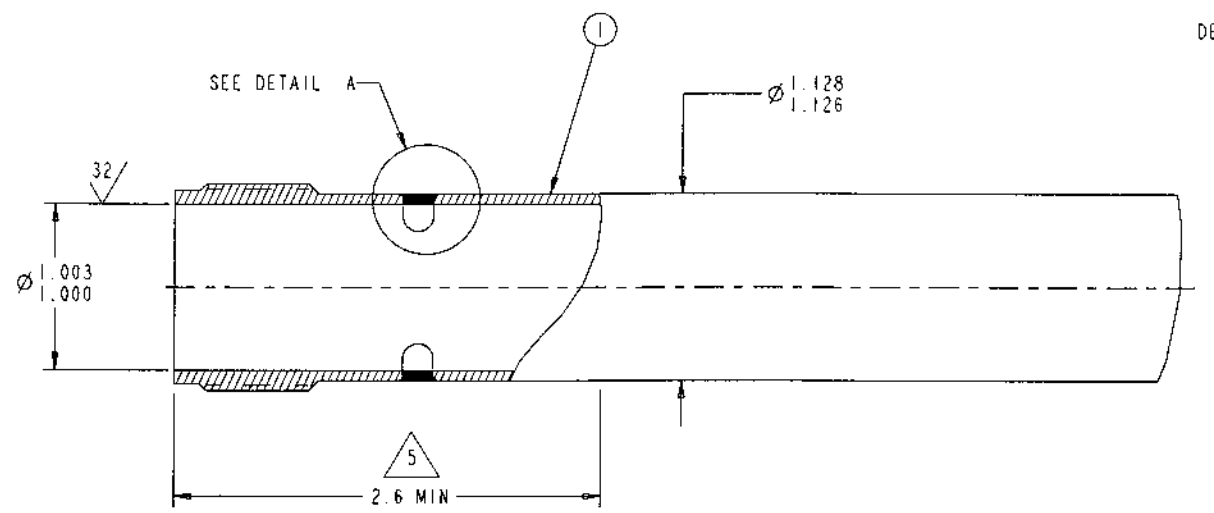


SECTION A-A

## ALTERED ITEM DRAWING

| FIND NO | QTY REQ | CAGE CODE | PART OR IDENTIFYING NUMBER | SPECIFICATION NUMBER | NOMENCLATURE OR DESCRIPTION | MATERIAL OR NOTE |
|---|---|---|---|---|---|---|
| 3 | AR | | TYPE I CLASS C COLOR Y | TT-P-1757B | ZINC CHROMATE PRIMER | |
| 2 | AR | | S-6/62345 | | PLASTIC STEEL EPOXY | 2 |
| (M101) 1 | 1 | 14083 | 10551423 | | TUBE, LAUNCHER | |

PARTS LIST

| | |
|---|---|
| 512-174-0110 | DL512-174-0110 |
| NEXT ASSY | USED ON |
| APPLICATION | |

UNLESS OTHERWISE SPECIFIED DIMENSIONS ARE IN INCHES
GENERAL TOLERANCES
XX DECIMALS ± 0.01
XXX DECIMALS ± 0.005
ANGLES ± 2.0°

MATERIAL:

DO NOT SCALE DRAWING

INDIAN HEAD DIVISION
NAVAL SURFACE WARFARE CENTER
INDIAN HEAD, MD 20640-5035

| | | |
|---|---|---|
| ENGINEER | [illegible] | 7/29/03 |
| ENGINEER | | |
| CHECKED | [illegible] | 7/29/03 |
| DRAWN | [illegible] | 7/29/03 |
| APPROVED FOR NSWC/IHMD | [illegible] | DATE 7/30/03 |

DEPARTMENT OF THE NAVY
NAVAL SURFACE WARFARE CENTER
INDIAN HEAD, MARYLAND 20640-5035

TUBE, LAUNCHER, MODIFIED

| SIZE | CAGE CODE | DRAWING NUMBER |
|---|---|---|
| D | 14083 | 512-174-0112 |

SCALE: NONE | SHEET 1 OF 1

DISTRIBUTION STATEMENT C: Distribution authorized to U.S. Government agencies and their contractors administrative or operational use, 7-1-93. Other requests for this document shall be referred to Commander, Indian Head Division, Naval Surface Warfare Center, Indian Head, MD 20640-5035.