CLASSIFICATION OF CHARACTERISTICS (DOD-STD-2101)	
CRITICAL	NONE
MAJOR	NONE
MINOR	ALL CHARACTERISTICS

REVISIONS			
LTR	DESCRIPTION	DATE	APPROVED
A	SEE NOR 1335AS276-A		
B	SEE ECP 1H91036	8.23.82	
C	SEE ECP 1H95027		

NOTES:

1. INTERPRET DRAWING IN ACCORDANCE WITH DOD-STD-100.
2. MATERIAL: IN ACCORDANCE WITH ASTM-D4066 AND THE PLASTICS CLASSIFICATION SYSTEM DESCRIBED IN ASTM-D4000, 30% GLASS FILLED NYLON 612 WITH LUBRICANT, COLOR NATURAL. DESIGNATION ASTM-D4000 PA061 G30 A99900 CA199 GB146 KB193 PA240 UB083.
3. CENTER BORE SHALL BE STRAIGHT FOR THE FIRST L250 INCHES AND TAPERED FOR THE REMAINDER OF LENGTH AS SHOWN.
4. INDENTATIONS MADE BY EJECTOR PINS OF MOLD ACCEPTABLE TO .05 MAX DEEP.

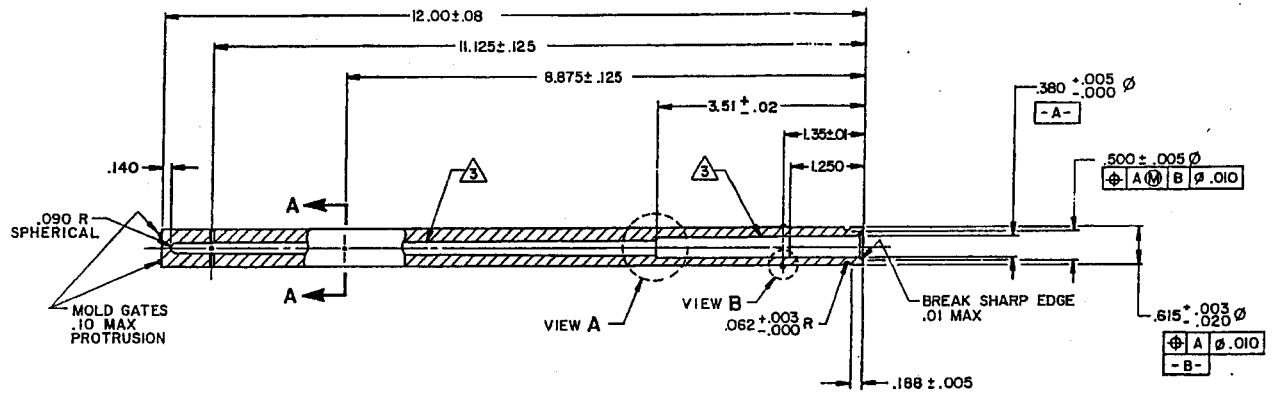

NOTE: PRICE QUOTE SHOULD INCLUDE HOT STAMPING OPERATION OF MARKING ~~LABEL~~ (CIRCLED) AS MENTIONED IN DRAWING 1335AS275. FIRST 2 LINES OF MARKING WILL REMAIN SAME FOR THE FULL QUANTITY, BUT THIRD LINE MARKING WILL CHANGE AFTER 19,000 PCS.

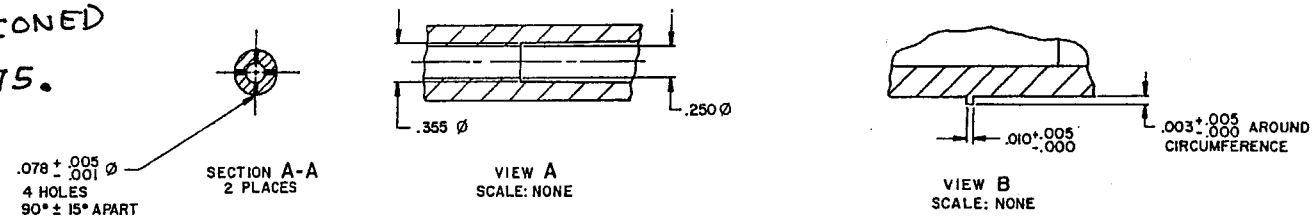

FIND NO.	QTY REQD	CODE IDENT	PART NO. OR IDENTIFYING NO.	SPECIFICATION NO.	NOMENCLATURE OR DESCRIPTION	MATERIAL OR NOTE

PARTS LIST

1335AS260	PVU-3B/E
NEXT ASSY	USED ON
APPLICATION	

UNLESS OTHERWISE SPECIFIED DIMENSIONS ARE IN INCHES.
TOLERANCES: ANGLES ± —
FRACTIONS ± —
2 PLACE DECIMALS ± —
3 PLACE DECIMALS ± .005
MATERIAL: 2

NAVAL ORDNANCE STATION
INDIAN HEAD, MD. 20640

APPROVALS	DATE
PREP: DTI (T.V.B.)	12MAR84
CHK:	
ENGR:	
APPROVED FOR NAVAIR	

DEPARTMENT OF THE NAVY
NAVAL AIR SYSTEMS COMMAND
WASHINGTON, D.C. 20361

TUBE, IGNITER

SIZE	CODE IDENT NO	NAVAIR DWG NO.
D	30003	1335 AS276

SCALE: 1/1 SHEET 1 OF 1

1335AS276

NOTES:

1. INTERPRET DRAWING IN ACCORDANCE WITH DOD-STD-100.

(M101) 2. IGNITION ASSEMBLY, FIND NO. 3, SHALL BE INSERTED INTO OPEN END OF IGNITER TUBE, FIND NO. 1, AS SHOWN. RESIN, FIND NO. 2, SHALL BE USED TO RETAIN IGNITION ASSEMBLY IN PLACE. PRIOR TO INSERTION, PLACE A SMALL BEAD OF RESIN, APPROX. .03 WIDTH, AROUND CARTRIDGE CASE. (EXCESS RESIN SHALL BE REMOVED AFTER INSERTION.)

~~3. IGNITER SHALL MEET THE REQUIREMENTS OF MIL-I-85547.~~

4. USING INK, FIND NO. 4, MARK IN ACCORDANCE WITH MIL-STD-1168 IN APPROXIMATE LOCATION SHOWN, USING 10-14 PT CHARACTERS.

CLASSIFICATION OF CHARACTERISTICS (DOD-STD-2101)
CRITICAL- NONE
MAJOR- 1
MINOR- ALL OTHER CHARACTERISTICS

REVISIONS			
REV	DESCRIPTION	DATE	APPROVAL
A	REDRAWN WITH CHANGE SEE ECP 1H02138	[illegible]	[illegible]

CAD MAINTAINED. CHANGES SHALL BE INCORPORATED BY THE DESIGN ACTIVITY.

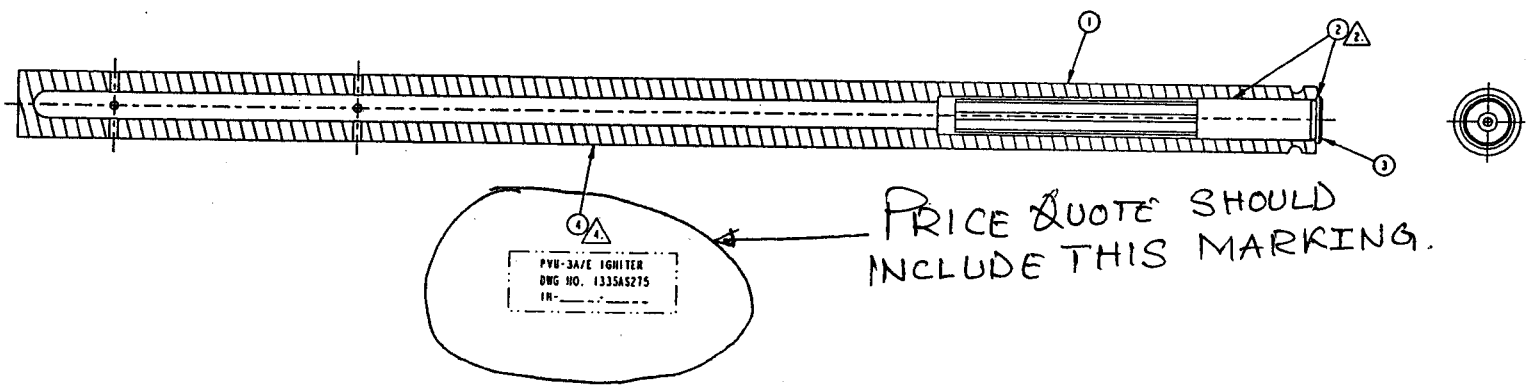

PRICE QUOTE SHOULD INCLUDE THIS MARKING.

FIND NO	QTY REQ	CAGE CODE	PART OR IDENTIFYING NO	SPECIFICATION	NOMENCLATURE OR DESCRIPTION	MATERIAL OR NOTE
4	AR		TYPE I	TT-I-1795	INK, STENCILING	4.
3	1		1335AS277		IGNITION ASSEMBLY	
2	AR		1335AS258		RESIN, EPOXY	
1	1		1335AS276		TUBE, IGNITER	

PARTS LIST

NEXT ASSY	USED ON
APPLICATION	

UNLESS OTHERWISE SPECIFIED DIMENSIONS ARE IN INCHES
GENERAL TOLERANCES
XX DECIMALS ± --
XXX DECIMALS ± ---
ANGLES ± -°
MATERIAL:
DO NOT SCALE DRAWING

INDIAN HEAD DIVISION
NAVAL SURFACE WARFARE CENTER
INDIAN HEAD, MD 20640-5035

ENGINEER
ENGINEER
CHECKED
DRAWN
APPROVED FOR RELEASE DATE

AUTHENTICATED 10/18/85

DEPARTMENT OF THE NAVY
NAVAL AIR SYSTEMS COMMAND
WASHINGTON, D.C. 20361

IGNITER, PVU-3A/E ASSEMBLY

SIZE	CAGE CODE	DRAWING NUMBER
D	30003	1335AS275

SCALE: NONE WEIGHT: --- SHEET 1 OF 1

DISTRIBUTION STATEMENT A. APPROVED FOR PUBLIC RELEASE; DISTRIBUTION IS UNLIMITED.