REQUEST FOR QUOTATIONS *(THIS IS NOT AN ORDER)*	THIS RFQ [X] IS [ ] IS NOT A SMALL BUSINESS SET-ASIDE	PAGE 1 OF PAGES 25

1. REQUEST NO.	2. DATE ISSUED	3. REQUISITION/PURCHASE REQUEST NO.	4. CERT. FOR NAT. DEF. UNDER BDSA REG. 2 AND/OR DMS REG. 1	RATING
N00174-06-Q-0122	17-Aug-2006			DO-S10

5a. ISSUED BY
NAVSEA INDIAN HEAD
101 STRAUSS AVE. BLDG. 1558
ATTN: CAROLYN ANDERSON C12C
CAROLYN.L.ANDERSON@NAVY.MIL
INDIAN HEAD MD 20640-5035

6. DELIVER BY *(Date)*
SEE SCHEDULE

7. DELIVERY
[X] FOB DESTINATION [ ] OTHER *(See Schedule)*

5b. FOR INFORMATION CALL: *(Name and Telephone no.) (No collect calls)*
CAROLYN ANDERSON 301/744-6545

8. TO: NAME AND ADDRESS, INCLUDING ZIP CODE

9. DESTINATION *(Consignee and address, including ZIP Code)*
NAVSEA INDIAN HEAD
SCALES BLDG. 1104
101 STRAUSS AVE.
INDIAN HEAD MD 20640-5035
TEL: 301-744-4758 FAX: 301-744-6546

10. PLEASE FURNISH QUOTATIONS TO THE ISSUING OFFICE IN BLOCK 5a ON OR BEFORE CLOSE OF BUSINESS:
(Date) 08-Sep-2006

IMPORTANT: This is a request for information, and quotations furnished are not offers. If you are unable to quote, please so indicate on this form and return it to the address in Block 5a. This request does not commit the Government to pay any costs incurred in the preparation of the submission of this quotation or to contract for supplies or services. Supplies are of domestic origin unless otherwise indicated by quoter. Any representations and/or certifications attached to this Request for Quotations must be completed by the quoter.

11. SCHEDULE *(Include applicable Federal, State, and local taxes)*

ITEM NO. (a)	SUPPLIES/ SERVICES (b)	QUANTITY (c)	UNIT (d)	UNIT PRICE (e)	AMOUNT (f)
	SEE SCHEDULE				

12. DISCOUNT FOR PROMPT PAYMENT	a. 10 CALENDAR DAYS %	b. 20 CALENDAR DAYS %	c. 30 CALENDAR DAYS %	d. CALENDAR DAYS No. %

NOTE: Additional provisions and representations [ ] are [ ] are not attached.

13. NAME AND ADDRESS OF QUOTER *(Street, City, County, State, and ZIP Code)*	14. SIGNATURE OF PERSON AUTHORIZED TO SIGN QUOTATION	15. DATE OF QUOTATION
	16. NAME AND TITLE OF SIGNER *(Type or print)*	TELEPHONE NO. *(Include area code)*

Section B - Supplies or Services and Prices

ITEM NO	SUPPLIES/SERVICES	QUANTITY	UNIT	UNIT PRICE	AMOUNT
0001		1	Lot		

REQ. NO. 52520/61640356
MODIFIED M161 CARTRIDGES
MODIFIED M162 CARTRIDGES
HERO IMPROVED M161 CARTRIDGES
HERO IMPROVED M162 CARTRIDGES

PLEASE NOTE: THE AWARD WILL BE BASED ON PAST PERFORMANCE, PRICE AND TECHNICAL EVALUATION.

LIST OF GOVERNMENT FURNISHED MATERIAL: HPC-23N PROPELLANT (NAVAIR DRAWING 838AS207) – QTY: ½ POUND
DATE AVAILABLE: 30 DAYS AFTER AWARD OF CONTRACT.

IHD 211 – SECTION M BEST VALUE EVALUATION AND BASIS FOR AWARD (FFP) (MAR 2000) (NAVSEA/IHD)

Offerors are required to follow specific instructions in submitting their information. Each offeror's submission will be screened by the Contracting Officer or a designee upon receipt to ensure compliance with the instructions contained in the solicitation. Elimination of an offeror due to failure to comply with the submission requirements of the solicitation is at the sole discretion of the Contracting Officer.

The following factors will be used to evaluate offers. The factors are listed in order of importance.

Factor 1: Technical
Factor 2: Past Performance
Factor 3: Price

Factor 1 – Technical

Evaluators will assign a rating for this factor based on the following criteria:

1. Engineering Design Capabilities:

0	No design capabilities.
1-4	Minimal design capabilities with no engineering staff
5-8	Engineering personnel with no computer aided design capability
9-10	Engineering personnel with computer aided design capability and experience designing cartridge actuated devices and/or their components

2. In-house Assembly Facilities and Capabilities for Electronic Components

0	No in-house assembly facilities and capabilities for electronic components
1-4	Minimal in-house assembly facilities and capabilities for electronic components
5-8	In-house assembly facilities and capabilities for electronic components that are manual and fully capable of supporting this project

9-10	In-house assembly facilities and capabilities for electronic components that are automated and fully capable of supporting this project

3. In-house Manufacturing Facilities and Capabilities for Glass to Metal Seals

0	No in-house manufacturing facilities and capabilities for glass to metal seals
1-4	Experience with and knowledge of glass to metal seal technology but no in-house manufacturing facilities or capabilities
5-8	Experience with and knowledge of glass to metal seal technology with in-house manufacturing facilities and capabilities
9-10	Extensive specialized knowledge of glass to metal seal technology with in-house manufacturing facilities and capabilities

4. In-house Manufacturing Facilities and Capabilities for Laser Welding

0	No in-house experience with or capabilities for laser welding
1-4	Experience with and knowledge of laser welding but no in-house manufacturing facilities or capabilities
5-8	Experience with and knowledge of laser welding with in-house manufacturing facilities and capabilities
9-10	Extensive specialized knowledge of laser welding glass with in-house manufacturing facilities and capabilities

5. In-house Manufacturing Facilities and Capabilities for Cartridge Assembly, Loading, and Production

0	No in-house experience with or capabilities for cartridge assembly, loading, and production
1-4	Experience with and knowledge of cartridge assembly, loading, and production but no in-house manufacturing facilities or capabilities
5-8	Experience with and knowledge of cartridge assembly, loading, and production with in-house manufacturing facilities or capabilities
9-10	Extensive specialized knowledge of cartridge assembly, loading, and production with in-house manufacturing facilities or capabilities

Factor 2 – Past Performance

Evaluators will assign a rating for this factor based on the following criteria:

Neutral - The offeror lacks a record of relevant or available past performance history. There is no expectation of either successful or unsuccessful performance based on the offeror's past performance record.

A – The offeror's performance of previously awarded relevant contract(s) met contractual requirements and exceeded many to the Government's benefit. The assessed prior performance was accomplished with very few or very minor problems for which corrective actions taken by, or proposed to be taken by, the offeror were, or are expected to be, highly effective. Performance of completed contracts either was consistently of the highest quality or exhibited a trend of becoming so. The offeror's past performance record leads to an extremely strong expectation of successful performance.

B - The offeror's performance of previously awarded relevant contract(s) met contractual requirements and exceeded some to the Government's benefit. The assessed prior performance was accomplished with some minor problems for which corrective actions taken by, or proposed to be taken by, the offeror were, or are expected to be, effective. Performance over completed contracts either was consistently of high quality or exhibited a trend of becoming so. The offeror's past performance record leads to a strong expectation of successful performance.

C - The offeror's performance of previously awarded relevant contract(s) met contractual requirements. The assessed prior performance was accomplished with some problems for which corrective actions taken by, or proposed to be taken by, the contractor were, or are expected to be, for the most part effective. Performance over completed contracts was consistently of adequate or better quality or exhibited a trend of becoming so. The offeror's past performance record leads to an expectation of successful performance.

D - The offeror's performance of previously awarded relevant contracts did not meet some contractual requirements. The assessed prior performance reflected some serious problems, for which the contractor either failed to identify or implement corrective actions in a timely manner, or for which the corrective actions implemented or proposed to be implemented were, or are expected to be, only partially effective. Performance over completed contracts was consistently of mediocre quality or exhibited a trend of becoming so. The offeror's past performance record leads to an expectation that successful performance might be difficult to achieve or that it can occur only with increased levels of Government management and oversight.

F - The offeror's performance of previously awarded relevant contract(s) did not meet most contractual requirements and recovery did not occur with the period of performance. The assessed prior performance reflected serious problem(s) for which the offeror either failed to identify or implement corrective actions or for which corrective actions, implemented, or proposed to be implemented, were, or are expected to be, mostly ineffective. Performance over completed contracts was consistently of poor quality or exhibited a trend of becoming so. The offeror's past performance record leads to a strong expectation that successful performance will not be achieved or that it can occur only with greatly increased levels of Government management and oversight.

Factor 3 – Price

Although price is the least important factor, it becomes increasingly important when offerors receive similar ratings for the other factors.

The Government may award a contract without discussions on the basis of initial offers received. Therefore, each initial offer should contain the offeror's best terms; however, if considered necessary by the contracting officer, discussions will be conducted only with those offerors determined to have a reasonable chance for award.

METHODOLOGY

Each factor will be reviewed based on the merits of the information contained in the offeror's submission. Evaluators will not allow any prior knowledge of the offeror to affect the evaluation of Factor 1, but all available, relevant, and timely past performance information will be considered during the evaluation of Factor 2.

Once evaluations are complete, offerors will be compared using tradeoffs between the factors, and award will be made to the offeror that represents the best value to the Government.

IHD 195 - <u>SECTION L PROPOSAL REQUIREMENTS (FEB 2000) (NAVSEA/IHD)</u>

Overview

Each offeror must submit a proposal in strict accordance with these instructions. When evaluating an offer, the Government will consider how well the offeror complied with both the letter and spirit of these instructions. The Government will consider any failure on the part of the offeror to comply with both the letter and the spirit of these instructions to be an indication of the type of conduct it can expect during purchase order performance. The Government reserves the right to exclude nonconforming proposals from further evaluation and award. Therefore, the Government encourages offerors to contact the contracting officer to request an explanation of any aspect of these instructions deemed necessary. The procurement is being conducted on a best value basis utilizing a trade-off

process. Factors are presented in order of importance. As a result of this solicitation, the Government intends to award a single purchase order based on initial offers and without holding discussions, but reserves the right to hold discussions at the Government's discretion.

Proposals must take the following form.

All offers must include one signed copy of the SF18 with the Section B pricing schedule completed. Offerors must also comply with the requirements of Section K clause 52.204-8, which requires the offeror to be registered in the Online Representations and Certifications Application (ORCA) with the NAICS code applicable to this procurement. Additionally, each offer must include five copies of Volume I and one copy of volume II.

Each volume must contain sufficient detail to enable evaluation based on the information in Section M, clause entitled Best Value Evaluation and Basis for Award and as detailed below.

Volume I –Technical (Factor 1)

The offeror shall submit a narrative addressing each of the five areas that follow this paragraph. This narrative may not exceed 10 pages and subsequent pages will not be evaluated.

1. Describe your engineering design capabilities. Address your engineering staff, computer aided design capabilities, and experience designing cartridge actuated devices and/or their components.

2. Describe your in-house assembly facilities and capabilities for electronic components. Detail your automated and manual equipment that will be used to fulfill the requirements of this contract.

3. Describe your in-house manufacturing facilities and capabilities for glass to metal seals. Address your experience with and knowledge of glass to metal seal technology, as well as your in-house manufacturing facilities and capabilities.

4. Describe your in-house manufacturing facilities and capabilities for laser welding. Address your experience with and knowledge of laser welding, as well as your in-house manufacturing facilities and capabilities.

5. Describe your in-house manufacturing facilities and capabilities for cartridge loading, assembly, and production. Address your experience with and knowledge of cartridge loading, assembly, and production, as well as your in-house manufacturing facilities and capabilities.

Volume II – Past Performance (Factor 2)

Past performance is a measure of the degree to which an offeror, as an organization, has during the past three years, satisfied its customers and complied with federal, state, and local laws and regulations. The offeror must provide a matrix with three references who will be able to provide information regarding the offeror's relevant past performance during the last three years in regard to the following areas: (1) customer satisfaction, (2) timeliness, (3) technical success, and (4) quality. The reference information must be current to facilitate the evaluation process. If the offeror has no relevant past performance within the last three years, then the offeror must make an affirmative statement to this effect.

The offeror may submit the Past Performance Questionnaire attached in Section J to any of the references listed on the Past Performance Matrix, and should request the references to complete the Past Performance Questionnaire and return it directly to:

Commander

NSWCIHD
Attn: Carolyn Anderson, Code C12C
101 Strauss Ave, Bldg 1558
Indian Head, MD 20640

Completed surveys may also be emailed or faxed to Carolyn Anderson at carolyn.l.anderson@navy.mil or 301-744-6545.

Past performance questionnaires provide offerors an opportunity to supplement information available in the Contractor Performance Assessment Reporting System (CPARS), as well as other information already available to the Government. If an offeror would like the information within CPARS to serve as the primary basis for determination of their past performance rating, then that offeror does not have to use past performance questionnaires but must still supply three references with current contact information as required above.

In the evaluation of an offeror's past performance, the Government reserves the right to use any information concerning relevant performance within the past three years.

CLAUSES INCORPORATED BY FULL TEXT

52.204-3 TAXPAYER IDENTIFICATION (OCT 1998)

(a) Definitions.

Common parent, as used in this provision, means that corporate entity that owns or controls an affiliated group of corporations that files its Federal income tax returns on a consolidated basis, and of which the offeror is a member.

Taxpayer Identification Number (TIN), as used in this provision, means the number required by the Internal Revenue Service (IRS) to be used by the offeror in reporting income tax and other returns. The TIN may be either a Social Security Number or an Employer Identification Number.

(b) All offerors must submit the information required in paragraphs (d) through (f) of this provision to comply with debt collection requirements of 31 U.S.C. 7701(c) and 3325(d), reporting requirements of 26 U.S.C. 6041, 6041A, and 6050M, and implementing regulations issued by the IRS. If the resulting contract is subject to the payment reporting requirements described in Federal Acquisition Regulation (FAR) 4.904, the failure or refusal by the offeror to furnish the information may result in a 31 percent reduction of payments otherwise due under the contract.

(c) The TIN may be used by the Government to collect and report on any delinquent amounts arising out of the offeror's relationship with the Government (31 U.S.C. 7701(c)(3)). If the resulting contract is subject to the payment reporting requirements described in FAR 4.904, the TIN provided hereunder may be matched with IRS records to verify the accuracy of the offeror's TIN.

(d) Taxpayer Identification Number (TIN).

___ TIN:.----------

___ TIN has been applied for.

___ TIN is not required because:

___ Offeror is a nonresident alien, foreign corporation, or foreign partnership that does not have income effectively connected with the conduct of a trade or business in the United States and does not have an office or place of business or a fiscal paying agent in the United States;

___ Offeror is an agency or instrumentality of a foreign government;

___ Offeror is an agency or instrumentality of the Federal Government.

(e) Type of organization.

___ Sole proprietorship;

___ Partnership;

___ Corporate entity (not tax-exempt);

___ Corporate entity (tax-exempt);

___ Government entity (Federal, State, or local);

___ Foreign government;

___ International organization per 26 CFR 1.6049-4;

___ Other----------

(f) Common parent.

___ Offeror is not owned or controlled by a common parent as defined in paragraph (a) of this provision.

___ Name and TIN of common parent:

Name----------

TIN----------

(End of provision)

52.213-4 TERMS AND CONDITIONS--SIMPLIFIED ACQUISITIONS (OTHER THAN COMMERCIAL ITEMS) (FEB 2006)

(a) The Contractor shall comply with the following Federal Acquisition Regulation (FAR) clauses that are incorporated by reference:

(1) The clauses listed below implement provisions of law or Executive order:

(i) 52.222-3, Convict Labor (June 2003) (E.O. 11755).

(ii) 52.222-21, Prohibition of Segregated Facilities (Feb 1999) (E.O. 11246).

(iii) 52.222-26, Equal Opportunity (Apr 2002) (E.O. 11246).

(iv) 52.225-13, Restrictions on Certain Foreign Purchases (FEB 2006) (E.o.s, proclamations, and statutes administered by the Office of Foreign Assets Control of the Department of the Treasury).

(v) 52.233-3, Protest After Award (Aug 1996) (31 U.S.C. 3553).

(vi) 52.233-4, Applicable Law for Breach of Contract Claim (OCT 2004) (Pub. L. 108-77, 108-78).

(2) Listed below are additional clauses that apply:

(i) 52.232-1, Payments (Apr 1984).

(ii) 52.232-8, Discounts for Prompt Payment (Feb 2002).

(iii) 52.232-11, Extras (Apr 1984).

(iv) 52.232-25, Prompt Payment (Oct 2003).

(v) 52.233-1, Disputes (Jul 2002).

(vi) 52.244-6, Subcontracts for Commercial Items (FEB 2006).

(vii) 52.253-1, Computer Generated Forms (Jan 1991).

(b) The Contractor shall comply with the following FAR clauses, incorporated by reference, unless the circumstances do not apply:

(1) The clauses listed below implement provisions of law or Executive order:

(i) 52.222-19, Child Labor--Cooperation with Authorities and Remedies (JAN 2005) (E.O. 13126). (Applies to contracts for supplies exceeding the micro-purchase threshold.)

(ii) 52.222-20, Walsh-Healey Public Contracts Act (DEC 1996) (41 U.S.C. 35-45) (Applies to supply contracts over $10,000 in the United States, Puerto Rico, or the U.S. Virgin Islands).

(iii) 52.222-35, Equal Opportunity for Special Disabled Veterans, Veterans of the Vietnam Era, and Other Eligible Veterans (DEC 2001) (38 U.S.C. 4212) (Applies to contracts of $25,000 or more).

(iv) 52.222-36, Affirmative Action for Workers with Disabilities (JUN 1998) (29 U.S.C. 793) (Applies to contracts over $10,000, unless the work is to be performed outside the United States by employees recruited outside the United States.) (For purposes of this clause, United States includes the 50 States, the District of Columbia, Puerto Rico, the Northern Mariana Islands, American Samoa, Guam, the U.S. Virgin Islands, and Wake Island.).

(v) 52.222-37, Employment Reports on Special Disabled Veterans, Veterans of the Vietnam Era, and Other Eligible Veterans (DEC 2001) (38 U.S.C. 4212) (Applies to contracts over $25,000).

(vi) 52.222-41, Service Contract Act, As Amended (JUL 2005) (41 U.S.C. 351, et seq.) (Applies to service contracts over $2,500 that are subject to the Service Contract Act and will be performed in the United States, District of Columbia, Puerto Rico, the Northern Mariana Islands, American Samoa, Guam, the U.S. Virgin Islands, Johnston Island, Wake Island, or the outer continental shelf lands.).

(vii) 52.223-5, Pollution Prevention and Right-to-Know Information (Aug 2003) (E.O. 13148) (Applies to services performed on Federal facilities).

(viii) 52.225-1, Buy American Act--Supplies (June 2003) (41 U.S.C. 10a-10d) (Applies to contracts for supplies, and to contracts for services involving the furnishing of supplies, for use in the United States or its outlying areas, if the value of the supply contract or supply portion of a service contract exceeds the micro-purchase threshold and the **acquisition**--

(A) Is set aside for small business concerns; or

(B) Cannot be set aside for small business concerns (see 19.502-2), and does not exceed $25,000.)

(ix) 52.232-33, Payment by Electronic Funds Transfer--Central Contractor Registration (May 1999). (Applies when the payment will be made by electronic funds transfer (EFT) and the payment office uses the Central Contractor Registration (CCR) database as its source of EFT information.)

(x) 52.232-34, Payment by Electronic Funds Transfer--Other than Central Contractor Registration (Oct 2003). (Applies when the payment will be made by EFT and the payment office does not use the CCR database as its source of EFT information.)

(xi) 52.247-64, Preference for Privately Owned U.S.-Flag Commercial Vessels (FEB 2006) (46 U.S.C. Appx 1241). (Applies to supplies transported by ocean vessels (except for the types of subcontracts listed at 47.504(d).)

(2) Listed below are additional clauses that may apply:

(i) 52.209-6, Protecting the Government's Interest When Subcontracting with Contractors Debarred, Suspended, or Proposed for Debarment (JAN 2005) (Applies to contracts over $25,000).

(ii) 52.211-17, Delivery of Excess Quantities (SEPT 1989) (Applies to fixed-price supplies).

(iii) 52.247-29, F.o.b. Origin (FEB 2006) (Applies to supplies if delivery is f.o.b. origin).

(iv) 52.247-34, F.o.b. Destination (NOV 1991) (Applies to supplies if delivery is f.o.b. destination).

(c) FAR 52.252-2, Clauses Incorporated by Reference (FEB 1998). This contract incorporates one or more clauses by reference, with the same force and effect as if they were given in full text. Upon request, the Contracting Officer will make their full text available. Also, the full text of a clause may be accessed electronically at this/these address(es): www.arnet.gov/far

(d) Inspection/Acceptance. The Contractor shall tender for acceptance only those items that conform to the requirements of this contract. The Government reserves the right to inspect or test any supplies or services that have been tendered for acceptance. The Government may require repair or replacement of nonconforming supplies or reperformance of nonconforming services at no increase in contract price. The Government must exercise its postacceptance rights--

(1) Within a reasonable period of time after the defect was discovered or should have been discovered; and

(2) Before any substantial change occurs in the condition of the item, unless the change is due to the defect in the item.

(e) Excusable delays. The Contractor shall be liable for default unless nonperformance is caused by an occurrence beyond the reasonable control of the Contractor and without its fault or negligence, such as acts of God or the public enemy, acts of the Government in either its sovereign or contractual capacity, fires, floods, epidemics, quarantine restrictions, strikes, unusually severe weather, and delays of common carriers. The Contractor shall notify the Contracting Officer in writing as soon as it is reasonably possible after the commencement of any excusable delay, setting forth the full particulars in connection therewith, shall remedy such occurrence with all

reasonable dispatch, and shall promptly give written notice to the Contracting Officer of the cessation of such occurrence.

(f) Termination for the Government's convenience. The Government reserves the right to terminate this contract, or any part hereof, for its sole convenience. In the event of such termination, the Contractor shall immediately stop all work hereunder and shall immediately cause any and all of its suppliers and subcontractors to cease work. Subject to the terms of this contract, the Contractor shall be paid a percentage of the contract price reflecting the percentage of the work performed prior to the notice of termination, plus reasonable charges that the Contractor can demonstrate to the satisfaction of the Government, using its standard record keeping system, have resulted from the termination. The Contractor shall not be required to comply with the cost accounting standards or contract cost principles for this purpose. This paragraph does not give the Government any right to audit the Contractor's records. The Contractor shall not be paid for any work performed or costs incurred that reasonably could have been avoided.

(g) Termination for cause. The Government may terminate this contract, or any part hereof, for cause in the event of any default by the Contractor, or if the Contractor fails to comply with any contract terms and conditions, or fails to provide the Government, upon request, with adequate assurances of future performance. In the event of termination for cause, the Government shall not be liable to the Contractor for any amount for supplies or services not accepted, and the Contractor shall be liable to the Government for any and all rights and remedies provided by law. If it is determined that the Government improperly terminated this contract for default, such termination shall be deemed a termination for convenience.

(h) Warranty. The Contractor warrants and implies that the items delivered hereunder are merchantable and fit for use for the particular purpose described in this contract.

(End of clause)

52.215-5 FACSIMILE PROPOSALS (OCT 1997)

(a) Definition. Facsimile proposal, as used in this provision, means a proposal, revision or modification of a proposal, or withdrawal of a proposal that is transmitted to and received by the Government via facsimile machine.

(b) Offerors may submit facsimile proposals as responses to this solicitation. Facsimile proposals are subject to the same rules as paper proposals.

(c) The telephone number of receiving facsimile equipment is: **(301) 744-6632**.

(d) If any portion of a facsimile proposal received by the Contracting Officer is unreadable to the degree that conformance to the essential requirements of the solicitation cannot be ascertained from the document--

(1) The Contracting Officer immediately shall notify the offeror and permit the offeror to resubmit the proposal;

(2) The method and time for resubmission shall be prescribed by the Contracting Officer after consultation with the offeror; and

(3) The resubmission shall be considered as if it were received at the date and time of the original unreadable submission for the purpose of determining timeliness, provided the offeror complies with the time and format requirements for resubmission prescribed by the Contracting Officer.

The Government reserves the right to make award solely on the facsimile proposal. However, if requested to do so by the Contracting Officer, the apparently successful offeror promptly shall submit the complete original signed proposal.

(End of provision)

52.219-1 SMALL BUSINESS PROGRAM REPRESENTATIONS (MAY 2004)

(a)(1) The North American Industry Classification System (NAICS) code for this acquisition is **332993**.

(2) The small business size standard is **1,500 Employees**.

(3) The small business size standard for a concern which submits an offer in its own name, other than on a construction or service contract, but which proposes to furnish a product which it did not itself manufacture, is 500 employees.

(b) Representations. (1) The offeror represents as part of its offer that it ( ) is, ( ) is not a small business concern.

(2) (Complete only if the offeror represented itself as a small business concern in paragraph (b)(1) of this provision.) The offeror represents, for general statistical purposes, that it ( ) is, ( ) is not a small disadvantaged business concern as defined in 13 CFR 124.1002.

(3) (Complete only if the offeror represented itself as a small business concern in paragraph (b)(1) of this provision.) The offeror represents as part of its offer that it ( ) is, ( ) is not a women-owned small business concern.

(4) (Complete only if the offeror represented itself as a small business concern in paragraph (b)(1) of this provision.) The offeror represents as part of its offer that it ( ) is, ( ) is not a veteran-owned small business concern.

(5) (Complete only if the offeror represented itself as a veteran-owned small business concern in paragraph (b)(4) of this provision.) The offeror represents as part of its offer that it ( ) is, ( ) is not a service-disabled veteran-owned small business concern.

(6) (Complete only if the offeror represented itself as a small business concern in paragraph (b)(1) of this provision.) The offeror represents, as part of its offer, that--

(i) It ( ) is, ( ) is not a HUBZone small business concern listed, on the date of this representation, on the List of Qualified HUBZone Small Business Concerns maintained by the Small Business Administration, and no material change in ownership and control, principal office, or HUBZone employee percentage has occurred since it was certified by the Small Business Administration in accordance with 13 CFR part 126; and

(ii) It ( ) is, ( ) is not a joint venture that complies with the requirements of 13 CFR part 126, and the representation in paragraph (b)(6)(i) of this provision is accurate for the HUBZone small business concern or concerns that are participating in the joint venture. (The offeror shall enter the name or names of the HUBZone small business concern or concerns that are participating in the joint venture:_____.) Each HUBZone small business concern participating in the joint venture shall submit a separate signed copy of the HUBZone representation.

(c) Definitions. As used in this provision--

Service-disabled veteran-owned small business concern--

(1) Means a small business concern--

(i) Not less than 51 percent of which is owned by one or more service-disabled veterans or, in the case of any publicly owned business, not less than 51 percent of the stock of which is owned by one or more service-disabled veterans; and

(ii) The management and daily business operations of which are controlled by one or more service-disabled veterans or, in the case of a service-disabled veteran with permanent and severe disability, the spouse or permanent caregiver of such veteran.

(2) Service-disabled veteran means a veteran, as defined in 38 U.S.C. 101(2), with a disability that is service-connected, as defined in 38 U.S.C. 101(16).

"Small business concern," means a concern, including its affiliates, that is independently owned and operated, not dominant in the field of operation in which it is bidding on Government contracts, and qualified as a small business under the criteria in 13 CFR Part 121 and the size standard in paragraph (a) of this provision.

Veteran-owned small business concern means a small business concern--

(1) Not less than 51 percent of which is owned by one or more veterans (as defined at 38 U.S.C. 101(2)) or, in the case of any publicly owned business, not less than 51 percent of the stock of which is owned by one or more veterans; and

(2) The management and daily business operations of which are controlled by one or more veterans.

"Women-owned small business concern," means a small business concern --

(1) That is at least 51 percent owned by one or more women; in the case of any publicly owned business, at least 51 percent of the stock of which is owned by one or more women; and

(2) Whose management and daily business operations are controlled by one or more women.

(d) Notice.

(1) If this solicitation is for supplies and has been set aside, in whole or in part, for small business concerns, then the clause in this solicitation providing notice of the set-aside contains restrictions on the source of the end items to be furnished.

(2) Under 15 U.S.C. 645(d), any person who misrepresents a firm's status as a small, HUBZone small, small disadvantaged, or women-owned small business concern in order to obtain a contract to be awarded under the preference programs established pursuant to section 8(a), 8(d), 9, or 15 of the Small Business Act or any other provision of Federal law that specifically references section 8(d) for a definition of program eligibility, shall--

(i) Be punished by imposition of fine, imprisonment, or both;

(ii) Be subject to administrative remedies, including suspension and debarment; and

(iii) Be ineligible for participation in programs conducted under the authority of the Act.

(End of provision)

52.219-6 NOTICE OF TOTAL SMALL BUSINESS SET-ASIDE (JUN 2003)

(a) Definition.

"Small business concern," as used in this clause, means a concern, including its affiliates, that is independently owned and operated, not dominant in the field of operation in which it is bidding on Government contracts, and qualified as a small business under the size standards in this solicitation.

(b) General. (1) Offers are solicited only from small business concerns. Offers received from concerns that are not small business concerns shall be considered nonresponsive and will be rejected.

(2) Any award resulting from this solicitation will be made to a small business concern.

(c) Agreement. A small business concern submitting an offer in its own name shall furnish, in performing the contract, only end items manufactured or produced by small business concerns in the United States or its outlying areas. If this procurement is processed under simplified **acquisition** procedures and the total amount of this contract does not exceed $25,000, a small business concern may furnish the product of any domestic firm. This paragraph does not apply to construction or service contracts.

(End of clause)

52.222-22 PREVIOUS CONTRACTS AND COMPLIANCE REPORTS (FEB 1999)

The offeror represents that --

(a) ( ) It has, ( ) has not participated in a previous contract or subcontract subject to the Equal Opportunity clause of this solicitation;

(b) ( ) It has, ( ) has not, filed all required compliance reports; and

(c) Representations indicating submission of required compliance reports, signed by proposed subcontractors, will be obtained before subcontract awards.

(End of provision)

52.222-25 AFFIRMATIVE ACTION COMPLIANCE (APR 1984)

The offeror represents that

(a) [ ] it has developed and has on file, [ ] has not developed and does not have on file, at each establishment, affirmative action programs required by the rules and regulations of the Secretary of Labor (41 CFR 60-1 and 60-2), or

(b) [ ] has not previously had contracts subject to the written affirmative action programs requirement of the rules and regulations of the Secretary of Labor.

(End of provision)

52.222-26 EQUAL OPPORTUNITY (APR 2002)

(a) Definition. United States, as used in this clause, means the 50 States, the District of Columbia, Puerto Rico, the Northern Mariana Islands, American Samoa, Guam, the U.S. Virgin Islands, and Wake Island.

(b) If, during any 12-month period (including the 12 months preceding the award of this contract), the Contractor has been or is awarded nonexempt Federal contracts and/or subcontracts that have an aggregate value in excess of $10,000, the Contractor shall comply with paragraphs (b)(1) through (b)(11) of this clause, except for work

performed outside the United States by employees who were not recruited within the United States. Upon request, the Contractor shall provide information necessary to determine the applicability of this clause.

(1) The Contractor shall not discriminate against any employee or applicant for employment because of race, color, religion, sex, or national origin. However, it shall not be a violation of this clause for the Contractor to extend a publicly announced preference in employment to Indians living on or near an Indian reservation, in connection with employment opportunities on or near an Indian reservation, as permitted by 41 CFR 60-1.5.

(2) The Contractor shall take affirmative action to ensure that applicants are employed, and that employees are treated during employment, without regard to their race, color, religion, sex, or national origin. This shall include, but not be limited to, (i) employment, (ii) upgrading, (iii) demotion, (iv) transfer, (v) recruitment or recruitment advertising, (vi) layoff or termination, (vii) rates of pay or other forms of compensation, and (viii) selection for training, including apprenticeship.

(3) The Contractor shall post in conspicuous places available to employees and applicants for employment the notices to be provided by the Contracting Officer that explain this clause.

(4) The Contractor shall, in all solicitations or advertisements for employees placed by or on behalf of the Contractor, state that all qualified applicants will receive consideration for employment without regard to race, color, religion, sex, or national origin.

(5) The Contractor shall send, to each labor union or representative of workers with which it has a collective bargaining agreement or other contract or understanding, the notice to be provided by the Contracting Officer advising the labor union or workers' representative of the Contractor's commitments under this clause, and post copies of the notice in conspicuous places available to employees and applicants for employment.

(6) The Contractor shall comply with Executive Order 11246, as amended, and the rules, regulations, and orders of the Secretary of Labor.

(7) The Contractor shall furnish to the contracting agency all information required by Executive Order 11246, as amended, and by the rules, regulations, and orders of the Secretary of Labor. The Contractor shall also file Standard Form 100 (EEO-1), or any successor form, as prescribed in 41 CFR part 60-1. Unless the Contractor has filed within the 12 months preceding the date of contract award, the Contractor shall, within 30 days after contract award, apply to either the regional Office of Federal Contract Compliance Programs (OFCCP) or the local office of the Equal Employment Opportunity Commission for the necessary forms.

(8) The Contractor shall permit access to its premises, during normal business hours, by the contracting agency or the OFCCP for the purpose of conducting on-site compliance evaluations and complaint investigations. The Contractor shall permit the Government to inspect and copy any books, accounts, records (including computerized records), and other material that may be relevant to the matter under investigation and pertinent to compliance with Executive Order 11246, as amended, and rules and regulations that implement the Executive Order.

(9) If the OFCCP determines that the Contractor is not in compliance with this clause or any rule, regulation, or order of the Secretary of Labor, this contract may be canceled, terminated, or suspended in whole or in part and the Contractor may be declared ineligible for further Government contracts, under the procedures authorized in Executive Order 11246, as amended. In addition, sanctions may be imposed and remedies invoked against the Contractor as provided in Executive Order 11246, as amended; in the rules, regulations, and orders of the Secretary of Labor; or as otherwise provided by law.

(10) The Contractor shall include the terms and conditions of subparagraphs (b)(1) through (11) of this clause in every subcontract or purchase order that is not exempted by the rules, regulations, or orders of the Secretary of Labor issued under Executive Order 11246, as amended, so that these terms and conditions will be binding upon each subcontractor or vendor.

(11) The Contractor shall take such action with respect to any subcontract or purchase order as the contracting officer may direct as a means of enforcing these terms and conditions, including sanctions for noncompliance; provided, that if the Contractor becomes involved in, or is threatened with, litigation with a subcontractor or vendor as a result of any direction, the Contractor may request the United States to enter into the litigation to protect the interests of the United States.

(c) Notwithstanding any other clause in this contract, disputes relative to this clause will be governed by the procedures in 41 CFR 60-1.1.

(End of clause)

52.232-33 PAYMENT BY ELECTRONIC FUNDS TRANSFER—CENTRAL CONTRACTOR REGISTRATION (OCT 2003)

(a) Method of payment. (1) All payments by the Government under this contract shall be made by electronic funds transfer (EFT), except as provided in paragraph (a)(2) of this clause. As used in this clause, the term “EFT” refers to the funds transfer and may also include the payment information transfer.

(2) In the event the Government is unable to release one or more payments by EFT, the Contractor agrees to either--

(i) Accept payment by check or some other mutually agreeable method of payment; or

(ii) Request the Government to extend the payment due date until such time as the Government can make payment by EFT (but see paragraph (d) of this clause).

(b) Contractor's EFT information. The Government shall make payment to the Contractor using the EFT information contained in the Central Contractor Registration (CCR) database. In the event that the EFT information changes, the Contractor shall be responsible for providing the updated information to the CCR database.

(c) Mechanisms for EFT payment. The Government may make payment by EFT through either the Automated Clearing House (ACH) network, subject to the rules of the National Automated Clearing House Association, or the Fedwire Transfer System. The rules governing Federal payments through the ACH are contained in 31 CFR part 210.

(d) Suspension of payment. If the Contractor's EFT information in the CCR database is incorrect, then the Government need not make payment to the Contractor under this contract until correct EFT information is entered into the CCR database; and any invoice or contract financing request shall be deemed not to be a proper invoice for the purpose of prompt payment under this contract. The prompt payment terms of the contract regarding notice of an improper invoice and delays in accrual of interest penalties apply.

(e) Liability for uncompleted or erroneous transfers. (1) If an uncompleted or erroneous transfer occurs because the Government used the Contractor's EFT information incorrectly, the Government remains responsible for--

(i) Making a correct payment;

(ii) Paying any prompt payment penalty due; and

(iii) Recovering any erroneously directed funds.

(2) If an uncompleted or erroneous transfer occurs because the Contractor's EFT information was incorrect, or was revised within 30 days of Government release of the EFT payment transaction instruction to the Federal Reserve System, and--

(i) If the funds are no longer under the control of the payment office, the Government is deemed to have made payment and the Contractor is responsible for recovery of any erroneously directed funds; or

(ii) If the funds remain under the control of the payment office, the Government shall not make payment, and the provisions of paragraph (d) of this clause shall apply.

(f) EFT and prompt payment. A payment shall be deemed to have been made in a timely manner in accordance with the prompt payment terms of this contract if, in the EFT payment transaction instruction released to the Federal Reserve System, the date specified for settlement of the payment is on or before the prompt payment due date, provided the specified payment date is a valid date under the rules of the Federal Reserve System.

(g) EFT and assignment of claims. If the Contractor assigns the proceeds of this contract as provided for in the assignment of claims terms of this contract, the Contractor shall require as a condition of any such assignment, that the assignee shall register separately in the CCR database and shall be paid by EFT in accordance with the terms of this clause. Notwithstanding any other requirement of this contract, payment to an ultimate recipient other than the Contractor, or a financial institution properly recognized under an assignment of claims pursuant to subpart 32.8, is not permitted. In all respects, the requirements of this clause shall apply to the assignee as if it were the Contractor. EFT information that shows the ultimate recipient of the transfer to be other than the Contractor, in the absence of a proper assignment of claims acceptable to the Government, is incorrect EFT information within the meaning of paragraph (d) of this clause.

(h) Liability for change of EFT information by financial agent. The Government is not liable for errors resulting from changes to EFT information made by the Contractor's financial agent.

(i) Payment information. The payment or disbursing office shall forward to the Contractor available payment information that is suitable for transmission as of the date of release of the EFT instruction to the Federal Reserve System. The Government may request the Contractor to designate a desired format and method(s) for delivery of payment information from a list of formats and methods the payment office is capable of executing. However, the Government does not guarantee that any particular format or method of delivery is available at any particular payment office and retains the latitude to use the format and delivery method most convenient to the Government. If the Government makes payment by check in accordance with paragraph (a) of this clause, the Government shall mail the payment information to the remittance address contained in the CCR database.

(End of Clause)

52.245-4 GOVERNMENT-FURNISHED PROPERTY (SHORT FORM) (JUN 2003)

(a) The Government shall deliver to the Contractor, at the time and locations stated in this contract, the Government-furnished property described in the Schedule or specifications. If that property, suitable for its intended use, is not delivered to the Contractor, the Contracting Officer shall equitably adjust affected provisions of this contract in accordance with the Changes clause when--

(1) The Contractor submits a timely written request for an equitable adjustment; and

(2) The facts warrant an equitable adjustment.

(b) Title to Government-furnished property shall remain in the Government. The Contractor shall use the Government-furnished property only in connection with this contract. The Contractor shall maintain adequate property control records in accordance with sound industrial practice and will make such records available for Government inspection at all reasonable times, unless the clause at Federal Acquisition Regulation 52.245-1, Property Records, is included in this contract.

(c) Upon delivery of Government-furnished property to the Contractor, the Contractor assumes the risk and responsibility for its loss or damage, except--

(1) For reasonable wear and tear;

(2) To the extent property is consumed in performing this contract; or

(3) As otherwise provided for by the provisions of this contract.

(d) Upon completing this contract, the Contractor shall follow the instructions of the Contracting Officer regarding the disposition of all Government-furnished property not consumed in performing this contract or previously delivered to the Government. The Contractor shall prepare for shipment, deliver f.o.b. origin, or dispose of the Government property, as may be directed or authorized by the Contracting Officer. The net proceeds of any such disposal shall be credited to the contract price or shall be paid to the Government as directed by the Contracting Officer.

(e) If this contract is to be performed outside the Untied States and its outlying areas, the words ``Government'' and ``Government-furnished'' (wherever they appear in this clause) shall be construed as ``United States Government'' and ``United States Governmen-furnished,'' respectively.

(End of clause)

52.247-45 F.O.B. ORIGIN AND/OR F.O.B. DESTINATION EVALUATION (APR 1984)

Offers are invited on the basis of both f.o.b. origin and f.o.b. destination, and the Government will award on the basis the Contracting Officer determines to be most advantageous to the Government. An offer on the basis of f.o.b. origin only or f.o.b. destination only is acceptable, but will be evaluated only on the basis submitted.

(End of provision)

252.204-7001 COMMERCIAL AND GOVERNMENT ENTITY (CAGE) CODE REPORTING (AUG 1999)

(a) The offeror is requested to enter its CAGE code on its offer in the block with its name and address. The CAGE code entered must be for that name and address. Enter “CAGE” before the number.

(b) If the offeror does not have a CAGE code, it may ask the Contracting Officer to request one from the Defense Logistics Information Service (DLIS). The Contracting Officer will--

(1) Ask the Contractor to complete section B of a DD Form 2051, Request for Assignment of a Commercial and Government Entity (CAGE) Code;

(2) Complete section A and forward the form to DLIS; and

(3) Notify the Contractor of its assigned CAGE code.

(c) Do not delay submission of the offer pending receipt of a CAGE code.

(End of provision)

252.204-7004 CENTRAL CONTRACTOR REGISTRATION (52.204-7) ALTERNATE A (NOV 2003)

(a) Definitions. As used in this clause--

“Central Contractor Registration (CCR) database” means the primary Government repository for contractor information required for the conduct of business with the Government.

“Commercial and Government Entity (CAGE) code” means--

(1) A code assigned by the Defense Logistics Information Service (DLIS) to identify a commercial or Government entity; or

(2) A code assigned by a member of the North Atlantic Treaty Organization that DLIS records and maintains in the CAGE master file. This type of code is known as an “NCAGE code.”

“Data Universal Numbering System (DUNS) number” means the 9-digit number assigned by Dun and Bradstreet, Inc. (D&B) to identify unique business entities.

“Data Universal Numbering System +4 (DUNS+4) number” means the DUNS number assigned by D&B plus a 4-character suffix that may be assigned by a business concern. (D&B has no affiliation with this 4-character suffix.) This 4-character suffix may be assigned at the discretion of the business concern to establish additional CCR records for identifying alternative Electronic Funds Transfer (EFT) accounts (see Subpart 32.11 of the Federal Acquisition Regulation) for the same parent concern.

“Registered in the CCR database” means that--

(1) The Contractor has entered all mandatory information, including the DUNS number or the DUNS+4 number, into the CCR database;

(2) The Contractor's CAGE code is in the CCR database; and

(3) The Government has validated all mandatory data fields and has marked the records “Active.”

(b)(1) By submission of an offer, the offeror acknowledges the requirement that a prospective awardee shall be registered in the CCR database prior to award, during performance, and through final payment of any contract, basic agreement, basic ordering agreement, or blanket purchasing agreement resulting from this solicitation.

(2) The offeror shall enter, in the block with its name and address on the cover page of its offer, the annotation "DUNS" or "DUNS +4" followed by the DUNS or DUNS +4 number that identifies the offeror's name and address exactly as stated in the offer. The DUNS number will be used by the Contracting Officer to verify that the offeror is registered in the CCR database.

(c) If the offeror does not have a DUNS number, it should contact Dun and Bradstreet directly to obtain one.

(1) An offeror may obtain a DUNS number-

(i) If located within the United States, by calling Dun and Bradstreet at 1-866-705-5711 or via the Internet at http://www.dnb.com; or

(ii) If located outside the United States, by contacting the local Dun and Bradstreet office.

(2) The offeror should be prepared to provide the following information:

(i) Company legal business.

(ii) Tradestyle, doing business, or other name by which your entity is commonly recognized.

(iii) Company Physical Street Address, City, State, and Zip Code.

(iv) Company Mailing Address, City, State and Zip Code (if separate from physical).

(v) Company Telephone Number.

(vi) Date the company was started.

(vii) Number of employees at your location.

(viii) Chief executive officer/key manager.

(ix) Line of business (industry).

(x) Company Headquarters name and address (reporting relationship within your entity).

(d) If the Offeror does not become registered in the CCR database in the time prescribed by the Contracting Officer, the Contracting Officer will proceed to award to the next otherwise successful registered Offeror.

(e) Processing time, which normally takes 48 hours, should be taken into consideration when registering. Offerors who are not registered should consider applying for registration immediately upon receipt of this solicitation.

(f) The Contractor is responsible for the accuracy and completeness of the data within the CCR database, and for any liability resulting from the Government's reliance on inaccurate or incomplete data. To remain registered in the CCR database after the initial registration, the Contractor is required to review and update on an annual basis from the date of initial registration or subsequent updates its information in the CCR database to ensure it is current, accurate and complete. Updating information in the CCR does not alter the terms and conditions of this contract and is not a substitute for a properly executed contractual document.

(g)
(1)
(i) If a Contractor has legally changed its business name, "doing business as" name, or division name (whichever is shown on the contract), or has transferred the assets used in performing the contract, but has not completed the necessary requirements regarding novation and change-of-name agreements in Subpart 42.12, the Contractor shall provide the responsible Contracting Officer a minimum of one business day's written notification of its intention to (A) change the name in the CCR database; (B) comply with the requirements of Subpart 42.12 of the FAR; and (C) agree in writing to the timeline and procedures specified by the responsible Contracting Officer. The Contractor must provide with the notification sufficient documentation to support the legally changed name.

(ii) If the Contractor fails to comply with the requirements of paragraph (g)(1)(i) of this clause, or fails to perform the agreement at paragraph (g)(1)(i)(C) of this clause, and, in the absence of a properly executed novation or change-of-name agreement, the CCR information that shows the Contractor to be other than the Contractor indicated in the contract will be considered to be incorrect information within the meaning of the "Suspension of Payment" paragraph of the electronic funds transfer (EFT) clause of this contract.

(2) The Contractor shall not change the name or address for EFT payments or manual payments, as appropriate, in the CCR record to reflect an assignee for the purpose of assignment of claims (see FAR Subpart 32.8, Assignment of Claims). Assignees shall be separately registered in the CCR database. Information provided to the Contractor's CCR record that indicates payments, including those made by EFT, to an ultimate recipient other than that

Contractor will be considered to be incorrect information within the meaning of the "Suspension of payment" paragraph of the EFT clause of this contract.

(h) Offerors and Contractors may obtain information on registration and annual confirmation requirements via the internet at http://www.ccr.gov or by calling 1-888-227-2423, or 269-961-5757.

(End of clause)

252.223-7002 SAFETY PRECAUTIONS FOR AMMUNITION AND EXPLOSIVES (MAY 1994)

(a) Definition. “Ammunition and explosives," as used in this clause --

(1) Means liquid and solid propellants and explosives, pyrotechnics, incendiaries and smokes in the following forms:

(i) Bulk,

(ii) Ammunition;

(iii) Rockets;

(iv) Missiles;

(v) Warheads;

(vi) Devices; and

(vii) Components of (i) through (vi), except for wholly inert items.

(2) This definition does not include the following, unless the Contractor is using or incorporating these materials for initiation, propulsion, or detonation as an integral or component part of an explosive, an ammunition or explosive end item, or of a weapon system --

(i) Inert components containing no explosives, propellants, or pyrotechnics;

(ii) Flammable liquids;

(iii) Acids;

(iv) Powdered metals; or

(v) Oxidizers;

(vi) Other materials having fire or explosive characteristics.

(b) Safety requirements.

(1) The Contractor shall comply with the requirements of the DoD Contractors' Safety Manual for Ammunition and Explosives, DoD 4145.26-M hereafter referred to as "the manual", in effect on the date of the solicitation for this contract. The Contractor shall also comply with any other additional requirements included in the schedule of this contract.

(2) The Contractor shall allow the Government access to the Contractor's facilities, personnel, and safety program documentation. The Contractor shall allow authorized Government representatives to evaluate safety programs, implementation, and facilities.

(c) Noncompliance with the manual.

(1) If the Contracting Officer notifies the Contractor of any noncompliance with the manual or schedule provisions, the Contractor shall take immediate steps to correct the noncompliance. The Contractor is not entitled to reimbursement of costs incurred to correct noncompliances unless such reimbursement is specified elsewhere in the contract.

(2) The Contractor has 30 days from the date of notification by the Contracting Officer to correct the noncompliance and inform the Contracting Officer of the actions taken. The Contracting Officer may direct a different time period for the correction of noncompliances.

(3) If the Contractor refuses or fails to correct noncompliances within the time period specified by the Contracting Officer, the Government has the right to direct the Contractor to cease performance on all or part of this contract. The Contractor shall not resume performance until the Contracting Officer is satisfied that the corrective action was effective and the Contracting Officer so informs the Contractor.

(4) The Contracting Officer may remove Government personnel at any time the Contractor is in noncompliance with any safety requirement of this clause.

(5) If the direction to cease work or the removal of Government personnel results in increased costs to the Contractor, the Contractor shall not be entitled to an adjustment in the contract price or a change in the delivery or performance schedule unless the Contracting Officer later determines that the Contractor had in fact complied with the manual or schedule provisions. If the Contractor is entitled to an equitable adjustment, it shall be made in accordance with the Changes clause of this contract.

(d) Mishaps. If a mishap involving ammunition or explosives occurs, the Contractor shall --

(1) Notify the Contracting Officer immediately;

(2) Conduct an investigation in accordance with other provisions of this contract or as required by the Contracting Officer; and

(3) Submit a written report to the Contracting Officer.

(e) Contractor responsibility for safety. (1) Nothing in this clause, nor any Government action or failure to act in surveillance of this contract, shall relieve the Contractor of its responsibility for the safety of --

(i) The Contractor's personnel and property;

(ii) The Government's personnel and property; or

(iii) The general public.

(2) Nothing in this clause shall relieve the Contractor of its responsibility for complying with applicable Federal, State, and local laws, ordinances, codes, and regulations (including those requiring the obtaining of licenses and permits) in connection with the performance of this contract.

(f) Contractor responsibility for contract performance. (1) Neither the number or frequency of inspections performed by the Government, nor the degree of surveillance exercised by the Government, relieve the Contractor of its responsibility for contract performance.

(2) If the Government acts or fails to act in surveillance or enforcement of the safety requirements of this contract, this does not impose or add to any liability of the Government.

(g) Subcontractors. (1) The Contractor shall insert this clause, including this paragraph (g), in every subcontract that involves ammunition or explosives.

(i) The clause shall include a provision allowing authorized Government safety representatives to evaluate subcontractor safety programs, implementation, and facilities as the Government determines necessary.

(ii) Note: The Government Contracting Officer or authorized representative shall notify the prime Contractor of all findings concerning subcontractor safety and compliance with the manual. The Contracting Officer or authorized representative may furnish copies to the subcontractor. The Contractor in turn shall communicate directly with the subcontractor, substituting its name for references to "the Government". The Contractor and higher tier subcontractors shall also include provisions to allow direction to cease performance of the subcontract if a serious uncorrected or recurring safety deficiency potentially causes an imminent hazard to DoD personnel, property, or contract performance.

(2) The Contractor agrees to ensure that the subcontractor complies with all contract safety requirements. The Contractor will determine the best method for verifying the adequacy of the subcontractor's compliance.

(3) The Contractor shall ensure that the subcontractor understands and agrees to the Government's right to access to the subcontractor's facilities, personnel, and safety program documentation to perform safety surveys. The Government performs these safety surveys of subcontractor facilities solely to prevent the occurrence of any mishap which would endanger the safety of DoD personnel or otherwise adversely impact upon the Government's contractual interests.

(4) The Contractor shall notify the Contracting Officer or authorized representative before issuing any subcontract when it involves ammunition or explosives. If the proposed subcontract represents a change in the place of performance, the Contractor shall request approval for such change in accordance with the clause of this contract entitled "Change in Place of Performance - Ammunition and Explosives".

(End of clause)

252.223-7003 CHANGE IN PLACE OF PERFORMANCE - AMMUNITION AND EXPLOSIVES (DEC 1991)

(a) The Offeror shall identify, in the "Place of Performance" provision of this solicitation, the place of performance of all ammunition and explosives work covered by the Safety Precautions for Ammunition and Explosives clause of this solicitation. Failure to furnish this information with the offer may result in rejection of the offer.

(b) The Offeror agrees not to change the place of performance of any portion of the offer covered by the Safety Precautions for Ammunition and Explosives clause contained in this solicitation after the date set for receipt of offers without the written approval of the Contracting Officer. The Contracting Officer shall grant approval only if there is enough time for the Government to perform the necessary safety reviews on the new proposed place of performance.

(c) If a contract results from this offer, the Contractor agrees not to change any place of performance previously cited without the advance written approval of the Contracting Officer.

(End of clause)

IHSAP4 ONE LOT SHIPMENT – QA INSPECTION

GOVERNMENT QUALITY ASSURANCE INSPECTION SHALL BE REQUIRED FOR ALL ITEMS PURCHASED HEREUNDER (AT DESTINATION).

DELIVERY TO BE MADE IN ONE LOT SHIPMENT. NO PARTIALS ACCEPTED.

Section E - Inspection and Acceptance

INSPECTION AND ACCEPTANCE TERMS

Supplies/services will be inspected/accepted at:

CLIN	INSPECT AT	INSPECT BY	ACCEPT AT	ACCEPT BY
0001	Destination	Government	Destination	Government

Section F - Deliveries or Performance

DELIVERY INFORMATION

CLIN	DELIVERY DATE	QUANTITY	SHIP TO ADDRESS	UIC
0001	16 wks. ADC	1 LOT	NAVSEA INDIAN HEAD SCALES BLDG. 1104 101 STRAUSS AVE. INDIAN HEAD MD 20640-5035 301-744-4758 FOB: Destination	N00174

STATEMENT OF WORK
CAD HERO Improvement of the M161 and M162 Cartridges
Requisition # 5252061640356

1.0 INTRODUCTION

The Indian Head Division, Naval Surface Warfare Center (NSWCIHD), is pursuing the development and procurement of Hazards of Electromagnetic Radiation to Ordnance (HERO) Safe replacements for the M161 and M162 Cartridges cable cutting cartridges. The current M161and M162 cartridges are deficient in design and are HERO Susceptible. A design improvement of the cartridge bridgewire was completed and underwent a design feasibility test series. At this time, the improved cartridge will undergo a design verification tests (DVT) and Qualification tests. This procurement is intended for the manufacturing of the improved M161 and M162 cartridges in support of the DVT and Qualification tests.

2.0 SCOPE

The contractor will manufacture and deliver to NSWCIHD a quantity of loaded and inert modified M161 and M162 cartridges for DVT test purposes. The DVT testing will include environmental as well as functional tests. After successful evaluation and acceptance by NSWCIHD of the loaded and inert DVT units, a Qualification Design Review (Critical Design Review) will be held. If an agreement to proceed is made at the design review, an optional second phase of the contract will begin. In the optional second phase, the contractor shall fabricate and deliver to NSWCIHD a quantity of loaded modified M161 and M162 cartridges for Qualification test purposes. The cartridges delivered for Qualification testing will be in the final production configuration.

NSWCIHD has developed a test method (see Appendix A) for inspection of the capacitor incorporated into the improved designs. The contractor shall inspect each cartridge (both loaded and inert) delivered to NSWC, Indian Head according to this method. An equivalent test equipment may be used. A pass criteria of 40 mV or less shall be used (recorded in section B8 of the test method).

The contractor has the option to make recommendations for design and manufacturing improvements, which will be reviewed and may be incorporated into the design if approved by NSWCIHD. Any proposed design changes shall be submitted to NSWCIHD for review and approval prior to the Qualification Design Review (Critical Design Review).

The contractor shall provide all labor, material (except for items provided as GFM per attachment), documentation of inspection results, and facilities to manufacture the required cartridges in accordance with the provided drawing packages.

The design, manufacturing processes, and any special tooling developed under this contract will become the sole property of the U.S. Navy and may be used for future competitive procurement contracts. No proprietary or patented processes or sole source materials shall be used in the manufacture of this item, except for the pyrotechnic materials, the insulation glass, the epoxy, and the o-ring lubricant.

3.0 APPLICABLE DOCUMENTS:

Drawings for "Modified M161 Cartridge, SK06040-E216M" (see List of Drawings)

Drawings for "Modified M162 Cartridge, SK06042-E216M" (see List of Drawings)

Drawings for "Outer container DL419688 rev C & DWG's" (see List of Drawings)

Drawings for "Inner container DL419687 rev D & DWG's" (see List of Drawings)

DI-MGMT-80227 Contractor's Progress, Status, and Management Report

DI-ADMN-80447 Contractor Summary Report

4.0 TASKS

4.1 Schedule:

a. The contractor shall develop a production/delivery schedule and submit it to NSWCIHD 15days after award of contract.

b. The contractor shall update the schedule developed in task 4.1.a and provide it as part of a monthly Contractor's Progress, Status, and Management Report DI-MGMT-80227.

4.2 Manufacture

a. The contractor shall manufacture a total of 350 each loaded M161 cartridges in accordance with drawing # SK06040-E216M "Modified M161 Cartridge".

b. The contractor shall manufacture a total of 20 each inert M161 cartridges in accordance with drawing # SK06040-E216M "Modified M161 Cartridge".

c. The contractor shall manufacture a total of 350 each loaded M162 cartridges in accordance with drawing # SK06042-E216M "Modified M162 Cartridge".

d. The contractor shall manufacture a total of 20 each inert M162 cartridges in accordance with drawing # SK06042-E216M "Modified M162 Cartridge".

e. The contractor shall develop a manufacturing process for both the M161 and M162 cartridges and submit the documented manufacturing process as part of the Contractor Summary Report DI-ADMN-80447.

4.3 Inspection

a. The contractor shall inspect all critical and major characteristics of the M161 and the M162 drawing packages in accordance with DOD-STD-2101. The inspection results shall delivered to NSWCIHD as per 4.3.d

b. The contractor shall conduct a 100% electrical resistance check on all manufactured cartridges as specified in the technical data packages. Actual values shall be recorded and delivered to NSWCIHD as per 4.3.d

c. The contractor shall conduct a 100% filter test on all units. Actual values shall be recorded and delivered to NSWCIHD as per 4.3.d

d. The contractor shall provide all inspection results with the delivered units and also as part of the Contractor Summary Report DI-ADMN-80447.

4.4 Meetings and Design Reviews

a. An initial meeting will be held at the contractor's facility to exchange information and to outline the scope of the program.

b. A Design Verification Test (DVT) design review shall be held at the contractor's facility. Personnel in attendance, at minimum, shall be the contractor's design engineering personnel and

NSWC, Indian Head engineering personnel. The review shall be held before DVT cartridges are manufactured for delivery as part of this contract. The design, electrical inspection method, configuration control, and manufacturing concerns shall be presented at this meeting as a minimum. The meeting minutes will be recorded by the contractor and considered documentation of the DVT design review and will be a deliverable to NSWC, Indian Head.

c. A Qualification design review (Critical Design Review) shall be held at the contractor's facility. Personnel in attendance, at minimum, shall be the contractor's design engineering personnel and NSWC, Indian Head engineering personnel. The review shall be held before Qualification cartridges are manufactured for delivery as part of optional Phase 2 of this contract. The design, electrical inspection method, configuration control, and manufacturing concerns shall be presented at this meeting as a minimum. At the conclusion of the CDR, a design freeze will be made if all parties are in agreement to proceed with optional Phase 2 of the program. The meeting minutes will be recorded by the contractor and considered documentation of the Qualification design review and will be a deliverable to NSWC, Indian Head.

5.0 Deliverables

This procurement will be divided into two phases.

5.1 Phase 1

a. A quantity of 150 fully loaded M161 units of the new design will be manufactured and delivered in one lot.

b. A quantity of 20 inert M161 units of the new design will be manufactured and delivered with the loaded M161 units.

c. A quantity of 150 fully loaded M162 units of the new design will be manufactured and delivered in one lot.

d. A quantity of 20 inert M162 units of the new design will be manufactured and delivered with the loaded M162 units.

e. Results of inspection of all critical and major characteristics, 100% electrical resistance check with actual values, and 100% filter test with actual values on all manufactured cartridges.

f. Certification of compliance of all units to the electrical resistance requirements specified in the technical data packages.

g. Monthly Contractor's Progress, Status, and Management Report DI-MGMT-80227.

h. Design Verification Test (DVT) Design Review Meeting Minutes

i. Qualification Design Review (Critical Design Review) Meeting Minutes

5.2 Phase 2 (Optional)

a. A quantity of 200 loaded qualification units of the new M161 design will be manufactured and delivered in one lot.

b. A quantity of 200 loaded qualification units of the new M162 design will be manufactured and delivered in one lot.

c. Results of inspection of all critical and major characteristics, 100% electrical resistance check with actual values, and 100% filter test with actual values on all manufactured cartridges.

d. Certification of compliance of all units to the electrical resistance requirements specified in the technical data packages.

e. Special tooling (i.e. gauges, crimping tools, bridgewire coil winding tools, etc) used for the manufacturing of the cartridges.

f. Monthly Contractor's Progress, Status, and Management Report DI-MGMT-80227.

g. Contractor Summary Report DI-ADMN-80447

h. The documented manufacturing processes for both the M161 and M162 cartridges are to be included in the Contractor Summary Report DI-ADMN-80447.

i. Engineering drawings for the special tooling (i.e. gauges, crimping tools, bridgewire coil winding tools, etc) used for the manufacturing of the cartridges. The drawings are to be included in the Contractor Summary Report DI-ADMN-80447.

5.3 The contractor shall deliver all manufactured cartridges to:

NSWC, Indian Head Division
Explosive Scales Bldg. 1140
101 Strauss Ave, Indian Head Md, 20640-5035

Mark box "For: Armen Malkasian x-2365"
Mark box with contract number and cartridge stock number

6.0 PERIOD OF PERFORMANCE/SCHEDULE

6.1 Phase 1

a. One hundred fifty (150) loaded M161 DVT units shall be delivered to NSWCIHD within 12 weeks after contract award. Results of inspection of all critical and major characteristics, 100% electrical resistance check with actual values, 100% filter test with actual values on all manufactured cartridges, and certification of compliance of all units to the electrical resistance requirements specified in the technical data packages shall be supplied with these units.

b. Twenty (20) inert M161 DVT units shall be delivered to NSWCIHD within 12 weeks after contract award. Results of inspection of all critical and major characteristics, 100% electrical resistance check with actual values, 100% filter test with actual values on all manufactured cartridges, and certification of compliance of all units to the electrical resistance requirements specified in the technical data packages shall be supplied with these units.

c. One hundred fifty (150) M162 DVT units shall be delivered to NSWCIHD within 16 weeks after contract award. Results of inspection of all critical and major characteristics, 100% electrical resistance check with actual values, 100% filter test with actual values on all manufactured cartridges, and certification of compliance of all units to the electrical resistance requirements specified in the technical data packages shall be supplied with these units.

d. Twenty (20) inert M162 DVT units shall be delivered to NSWCIHD within 16 weeks after contract award. Results of inspection of all critical and major characteristics, 100% electrical resistance check with actual values, 100% filter test with actual values on all manufactured cartridges, and certification of compliance of all units to the electrical resistance requirements specified in the technical data packages shall be supplied with these units.

e. Monthly Contractor's Progress, Status, and Management Report DI-MGMT-80227, the first of which shall be submitted to NSWCIHD 15 days after award of contract (see section 4.1).

6.2 Phase 2 (Optional)

a. Two hundred (200) M161 Qualification units shall be delivered to NSWCIHD ten weeks after an agreement to proceed with optional Phase 2 has been made. Results of inspection of all critical and major characteristics, 100% electrical resistance check with actual values, 100% filter test with actual values on all manufactured cartridges, and certification of compliance of all units to the electrical resistance requirements specified in the technical data packages shall be supplied with these units.

b. Two hundred (200) M162 Qualification units shall be delivered to NSWCIHD ten weeks after an agreement to proceed with optional Phase 2 has been made. Results of inspection of all critical and major characteristics, 100% electrical resistance check with actual values, 100% filter test with actual values on all manufactured cartridges, and certification of compliance of all units to the electrical resistance requirements specified in the technical data packages shall be supplied with these units.

c. Monthly Contractor's Progress, Status, and Management Report DI-MGMT-80227.

d. The contractor shall submit the Contractor Summary Report DI-ADMN-80447 no later than 15 days after delivery of the Qualification units.

Electrical Inspection Methods – Bridgewire/Capacitor Filter Test and Bridgewire Resistance Test

1. Overview

a. Resistance

Resistance is measured at 0 Hz (i.e. DC) using Space Electronics Igniter Circuit Testers. This identifies open and shorted connections at the bridgewire.

b. Filter Test

Directly measuring the capacitance value using DC resistance when the capacitor is installed in parallel with the bridgewire cannot be done with sufficient resolution. Therefore filter testing is conducted using AC current at 1 Mhz where the filter capacitor and bridgewire have combined impedance. This identifies open or disconnected filter capacitors and provides verification of the filter's presence and proper connection by measuring its low reactance at 1 Mhz in a voltage divider circuit.

2. Test Circuit

Figure 1 is a schematic diagram of the test setup. It consists of a sine wave signal generator set to 1 Mhz driving the cartridge's bridgewire and filter through four voltage dropping resistors. The four dropping resistors are in series with the unit as a safety measure. Current is also controlled using a switch box for added safety. The unit connects to the test box (Picture 1) via the test clips. An oscilloscope is used to measure the input voltage and the voltage across the cartridge.

3. Test Equipment

Integra Model 40 Oscilloscope
- 20 Mega-Samples/sec
- 12 Bit
- Sweep Length: 200,000 points

Wavetek 100 Mhz Waveform Generator, Model 395

Space Electronics Igniter Circuit Tester, Model 101-SRZ

4. Procedure

SECTION A. TEST SETUP

Note

Testing shall be conducted at 70 ± 5 °F (ambient temperature).

A1. Place holding device (closed bomb, vise, etc.) on worktable. Ensure proper grounding.

WARNING

Operators must stand on nonconductive mat when operating a function generator.

A2. Turn on the function generator and press the waveform button. The control panel is shown in Picture 2. Press the waveform button and select sine waveform. Press the amplitude button and enter 5 volts peak to peak (Vpp). Press the offset button and enter zero volts. Press the frequency button and set it to 1,000,000 hertz. Press the mode button and set it to "trig'd" mode and "cnt:" to 10,000 cycles (10 milliseconds).

A3. Connect a BNC cable from the function generator output connector (main out) to the oscilloscope input channel one using a tee connector. Connect the second side of the tee to the interface box bridgewire port.

A4. Connect the interface box output monitor to a 50-ohm terminator. Connect the terminator to oscilloscope channel two.

A5. Insert impulse cartridge with a known bridgewire resistance of 1.0 Ohm or a precision 1.0 Ohm resistor.

A6. Turn on the oscilloscope and set the trigger to channel one. Set the channel one voltage level to one volt per division. Set the channel two voltage to 25 millivolts per division. Set the sweep time to 100 microseconds per division. Set the trigger level to one division above channel one. Set the trigger to normal.

A7. Arm the trigger of the oscilloscope.

A8. Press the main output button on the function generator.

A9. Press the test button on the interface box and hold it.

A10. Press the manual trigger on the function generator.

A11. Measure the peak to peak voltage of channel one. Adjust the amplitude voltage till 100 millivolts peak to peak ±0.01 volt can be measured across the resistor (press the zoom button to view three cycles).

A12. Measure the peak to peak voltage of channel two and confirm it is less than 0.100 volts peak to peak. Record the calibration voltage level.

A13. Remove the inert cartridge or precision resistor.

SECTION B. TEST

WARNING

Ensure test sample output end is pointed away from test operator at all times.

Ensure that shield is between test cartridge/interface box and personnel equipment at all times.

B1. Obtain the test unit.

B2. Connect the positive and negative leads of the unit to interface box.

B3. Press arm button (Acquisition/Hold Next Button) on the oscilloscope and observe the "waiting for trigger" indication.

B4. Press and hold the test button attached to the interface box data line.

B5. Momentarily press the manual trigger button on the function generator.

B6. Release interface test box.

B7. Observe the absence of the "waiting for trigger," and change in the waveform on oscilloscope. (If "waiting for trigger" is still present, setup is incorrect, contact an electronic technician/engineer.

B8. Record the output voltage (peak to peak) on channel two.

B9. Disconnect leads from interface box to unit.

B10. Follow Steps B1 through B9 for subsequent test sample.

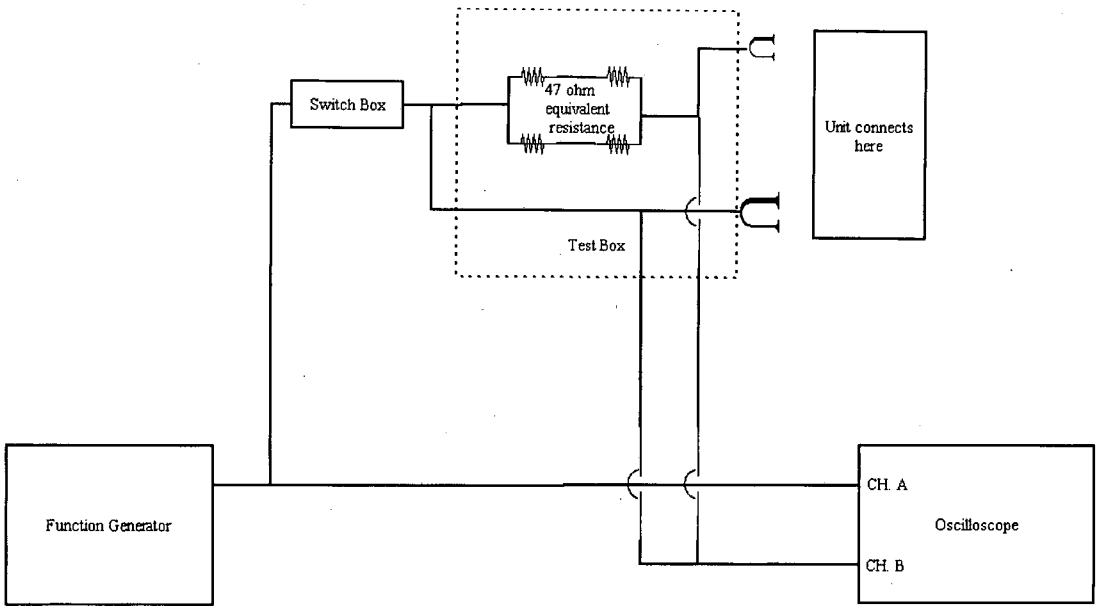

Figure 1: Schematic Diagram of Test Setup

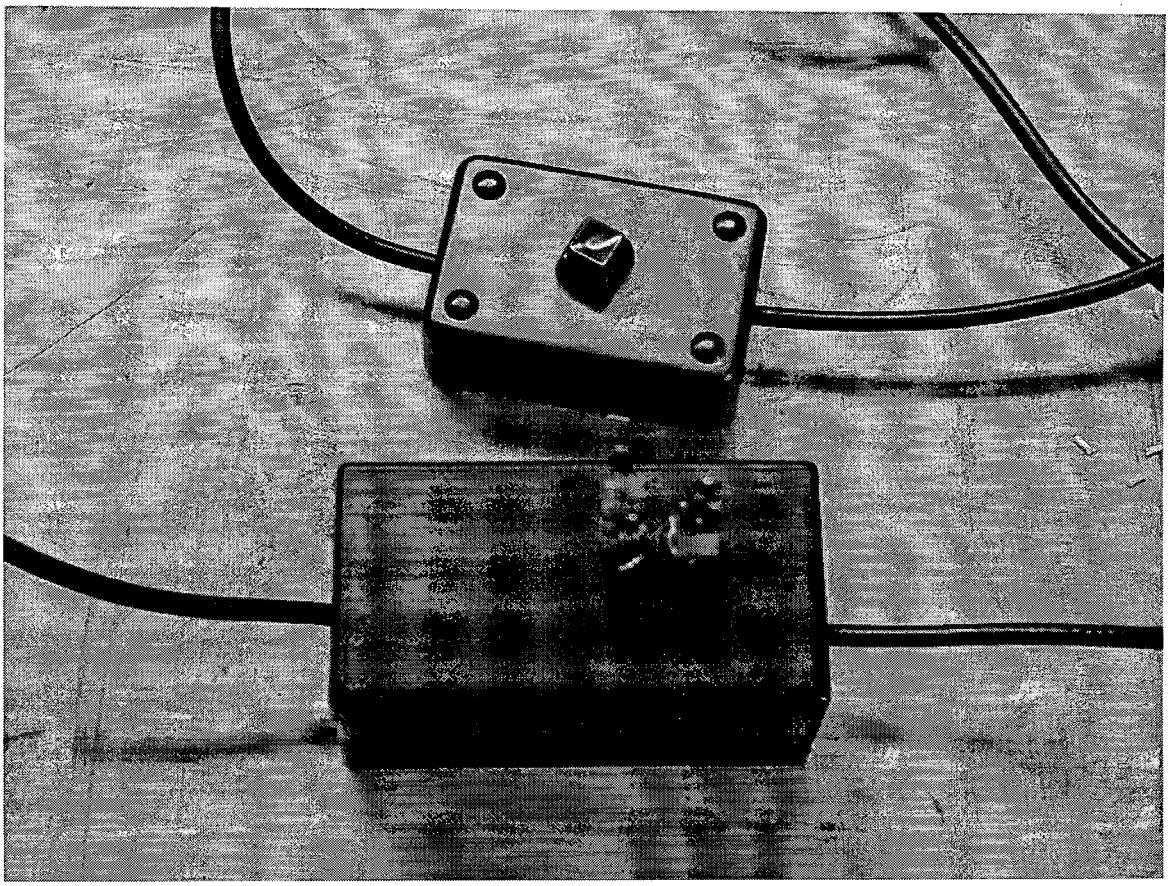

Picture 1: Test box (bottom) and Switch box (top)

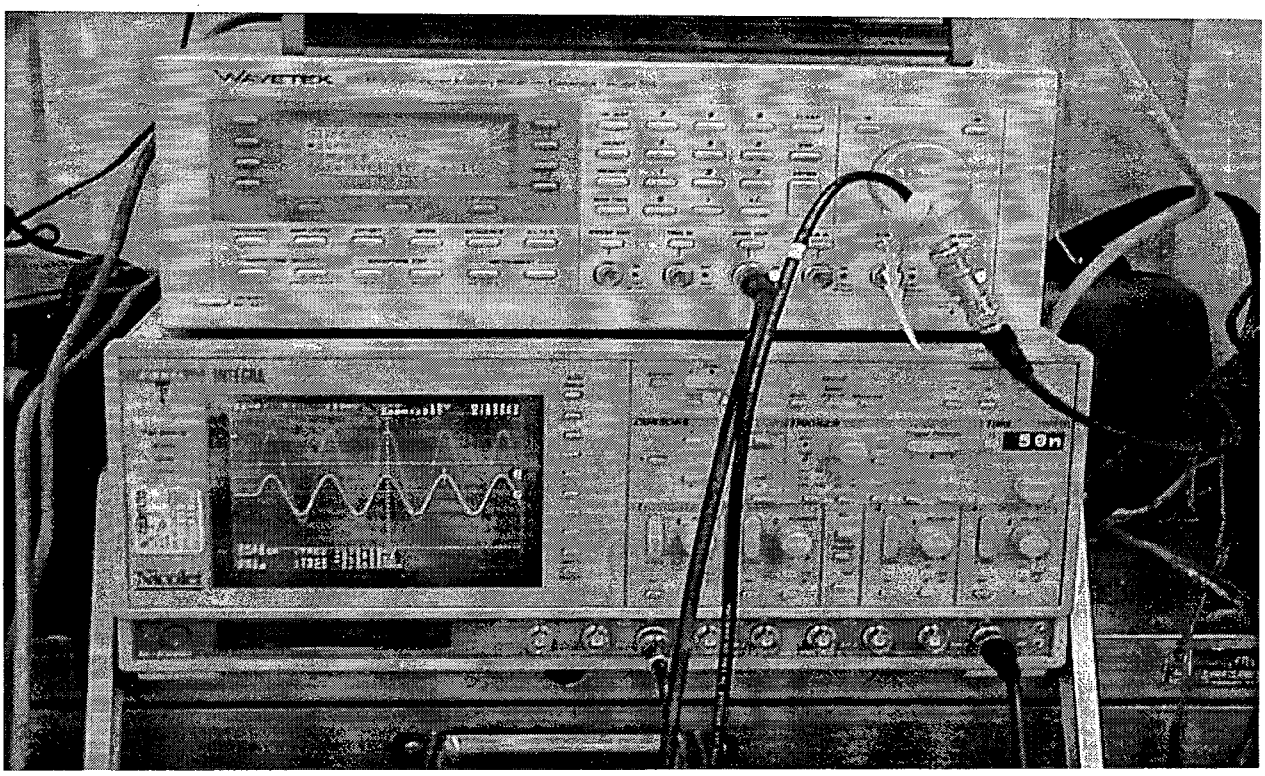

Picture 2: Function Generator and Oscilloscope

Req. #5252061640356

List of Drawings

Modified M161 Cartridge Drawings:

SK06040-E216M	MODIFIED M161 ASSEMBLY
SK06040-E216M-1	CARTRIDGE CASE, SUB-ASSEMBLY, MACHINED
SK06040-E216M-2	CARTRIDGE CASE, SUB-ASSEMBLY, WELDED
SK06040-E216M-3	CASE AND BRIDGEWIRE ASSEMBLY
SK06040-E216M-4	CASE AND FILTER ASSEMBLY
SK06040-E216M-5	GLASS TO METAL SEAL ASSEMBLY
SK06040-E216M-6	CASE
SK06040-E216M-7	PIN, CONTACT *
SK3205AS245	INSULATION, GLASS *
SK06040-E216M-10	CAPACITOR *
SK06040-E216M-9	BRIDGEWIRE *
SK06040-E216M-11	SLEEVE
SK06040-E216M-8	CUTING PUNCH
838AS207	PROPELLANT, DOUBLE BASE *
707AS114	RESIN, EPOXY *
834AS129	LUBRICANT, O-RING *
929845	RECIEVER GAGE

Modified M162 Cartridge Drawings:

SK06042-E216M	MODIFIED M162 CARTRIDGE (ASSEMBLY)
SK06042-E216M-1	CARTRIDGE CASE, SUB-ASSEMBLY, MACHINED
SK06042-E216M-2	CARTRIDGE CASE, SUB-ASSEMBLY, WELDED
SK06042-E216M-3	CASE AND BRIDGEWIRE ASSEMBLY
SK06042-E216M-4	CASE AND FILTER ASSEMBLY
SK06042-E216M-5	GLASS TO METAL SEAL ASSEMBLY
SK06042-E216M-6	CASE
SK06040-E216M-7	PIN, CONTACT *
SK3205AS245	INSULATION, GLASS *
SK06040-E216M-10	CAPACITOR *
SK06040-E216M-9	BRIDGEWIRE *
SK06042-E216M-11	SLEEVE
SK06042-E216M-8	CUTING PUNCH
838AS207	PROPELLANT, DOUBLE BASE *
707AS114	RESIN, EPOXY *
834AS129	LUBRICANT, O-RING *

* = drawing is common to both cartridge designs

DL419688 rev C & DWG's (Outer Container)

1863086	CONTAINER, OUTER, FOR CARTRIDGE, ASSEMBLY

DL419687 rev D & DWG's (Inner Container)

2015119	SUPPPORT
2015120	TRAY
2022773	CONTAINER, INNER, FOR CARTRIDGE, ASSEMBLY

NAVAL ORDNANCE STATION
INDIAN HEAD MD 20640

APPROVED BY Victor N. Fredette Jr DATE AUG 10 1979

REPLACES LD # 419688
REV B WITH CHANGE
DL REV C CHG NO 0000

DATA LIST DL419688
CONTAINER,OUTER,CARTRIDGE,IMPULSE,MK 23 TYPES
FEDERAL STOCK NO DODIC

TOP ASSEMBLY DRAWING C1863086

FSCM	DOCUMENT IDENT NUMBER	REV	DOC DATA	NO SH	DOCUMENT NAME	DOC SYM	R	S C
	DATA LISTS							
30003	*DL419687	C	14MAY69		CNTNR,INNER,MK 23		U	U
	DRAWINGS							
30003	C1863086	B	14MAY69	1	CNTNR,OUTER,MK 23	W	U	U
	GOVERNMENT STANDARDS AND SPECIFICATIONS							
	* MILITARY STANDARDS (BOOK FORM)							
96906	MIL-STD-8				DIM AND TOL		U	U
96906	MIL-STD-12				ABBREVIATION		U	U
96906	MIL-STD-129				MARKING		U	U
96906	MIL-STD-731				WOOD MEMBER		U	U
	* FEDERAL SPECIFICATIONS							
81348	PPP-B-621				BOX		U	U
81348	PPP-F-320				FIBERBOARD		U	U
	NAVY STANDARDS AND SPECIFICATIONS							
	* QUALITY ASSURANCE PROVISIONS							
10001	WR-43	A	14JUN65		QUAL ASSURANCE PROV		U	U

TOTALS FOR THIS LISTING
DWG & ASSOC LIST = 0002
GOVT SPEC & STD = 0006
IND SPEC & STD = 0000
OTHER SPEC & STD = 0000
OUTSTANDING CHG = 0000
NAVY STD + SPEC = 0001

SYMBOLS IN COLUMN DOC SYM
A=ALTERED ITEM DWG
C=SPEC CONTROL DWG
E=GAGE & TEST EQPT DWG
F=INTFC CONT DWG
I=PRODUCTION TOOLING DWG
L=SEL ITEM DWG
Q=SQAP DATA ON DWG
S=SOURCE CONT DWG
W=WR43A ON DWG

SYMBOLS IN COLUMN R (RIGHTS)
L=LIMITED RIGHTS U=UNLIMITED RIGHTS
SYMBOLS IN COLUMN SC (SECURTIY CLASSIFICATION)
C=CONFIDENTIAL S=SECRET
U=UNCLASSIFIED T=TOP SECRET

# INDICATES DATA NOT AVAILABLE
* INDICATES DOCUMENTS NOT SUPPLIED WITH TECHNICAL DATA PACKAGE AND MAY BE OBTAINED THRU THE AGENCY INDICATED BY THE FSCM
REF INDICATES DRAWINGS NOT REQUIRED TO DEFINE, PROCURE OR INSPECT THE END ITEM

CLASSIFICATION OF CHARACTERISTICS (WR 43)	
CRITICAL	NONE
MAJOR	7
MINOR	ALL OTHER CHARACTERISTICS

(B7)

REVISIONS			
SYM	DESCRIPTION	DATE	APPROVAL
A	SEE CN 1863086-A	1-25-68	[illegible]
B	(1-7) SEE DCN 1863086-B TECHNICAL COGNIZANCE CHANGED TO 30003.	5-14-68	[illegible]

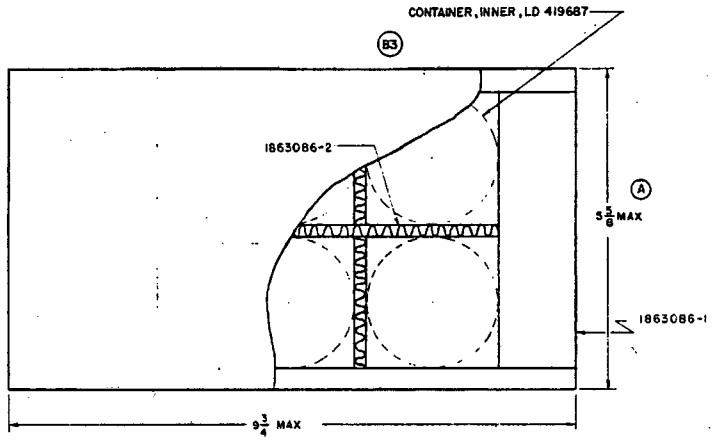

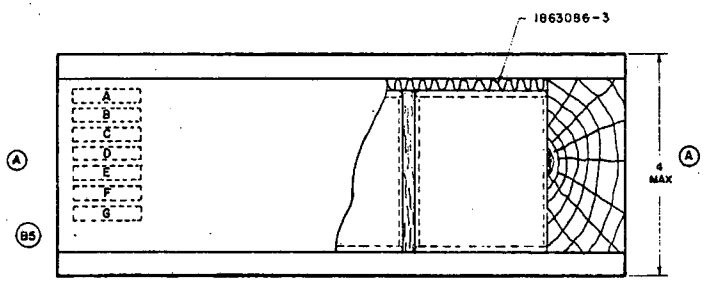

(B4)

REQUIRED MARKING (M 101)
SEE NOTE 3

A. FEDERAL STOCK NUMBER AND DOD CODE
B. CARTRIDGE NOMENCLATURE
C. CARTRIDGE ASSEMBLY DRAWING NO.
D. QUANTITY
E. GROSS WEIGHT AND CUBE
F. LOT NO. - MANUFACTURER'S SYMBOL - CARTRIDGE LOADING DATE (MO. & YR.)
G. CONTRACT OR PURCHASE ORDER NO.

NOTES:

1. FOR LIST OF DRAWINGS, ASSEMBLIES, PARTS, SPECIFICATIONS, ETC., SEE LD 419688.
2. (A) FOR CONTAINER, INNER, SEE LD 419687.
3. (B1) (M 102) DETAILS OF APPLYING THE SPECIFIED MARKING, SUCH AS METHOD, DEFINITIONS, LOCATION, SIZE AND MATERIALS, SHALL BE IN ACCORDANCE WITH MIL-STD-129.
4. INTERPRET DIMENSIONS AND TOLERANCES IN ACCORDANCE WITH MIL-STD-8.
5. INTERPRET ABBREVIATIONS IN ACCORDANCE WITH MIL-STD-12.
6. (M 103) [FIBERBOARD MATERIAL: WHERE FIBERBOARD IS CALLED FOR IT SHALL BE IN ACCORDANCE WITH PPP-F-320, TYPE CF, WEATHER RESISTANT, VARIETY SW, GRADE OPTIONAL] THE THICKNESS MAY BE VARIED BY USING MATERIAL OF A, B, OR C FLUTE CONSTRUCTION.

(M 104) (A) PC 1. [BOX, WOOD, NAILED. CONSTRUCT IN ACCORDANCE WITH PPP-B-621, EXCEPT THAT NO STRAPPING IS REQUIRED. STYLE BOX AS SHOWN. USE GROUP I, II OR III WOODS AS DEFINED BY MIL-STD-731. LUMBER THICKNESS SHALL BE IN ACCORDANCE WITH TABLE III OF PPP-B-621. FOR WEIGHT OF CONTENTS NOT EXCEEDING 50 LBS, FOOTNOTE 1] BOX DIMENSIONS, INSIDE: 6-15/16 LONG X 4-9/16 WIDE X 2-15/16 DEEP TOLERANCE: ±1/16

(M 105) (B2) PC 2. PARTITION [MATERIAL: FIBERBOARD; SEE NOTE 6. PARTITION SHALL BE MADE OF 3 PIECES, SLOTTED AND ASSEMBLED TO FORM 6 SPACES FOR INNER CONTAINERS] OVERALL DIMENSIONS AFTER ASSEMBLY: 6-7/8 LONG X 4-1/2 WIDE X 2-1/16 HIGH. TOLERANCE: ±0-1/16.

(M 106) PC 3. SPACER [MATERIAL: FIBERBOARD; SEE NOTE 6] DIMENSIONS: 6-7/8 LONG X 4-1/2 WIDE. TOLERANCE: +0-1/16. CUT OFF ONE CORNER 3/4 ± 1/8 X 3/4 ± 1/8 X 45° (REF.). A MINIMUM OF ONE SPACER SHALL BE USED AS SHOWN AND ADDITIONAL SPACERS SHALL BE USED AS REQUIRED FOR A TIGHT PACK. A TIGHT PACK IS MANDATORY. (M 107)

EST. GROSS WT.	4 LBS.
EST. NET WT.	1 LB.
EST. CU. DISPL.	.1 CU. FT.

1863086

(B6) CODE IDENT 30003 NAVORD AND NAVAIR APPLICATION

QTY	USED FOR
6	CONTAINER, INNER, FOR CARTRIDGE, IMPULSE, MK 23 MOD. 0
	PACKAGED ITEM

NEXT ASSY	LD 491837
APPLICATION	USED ON

UNLESS OTHERWISE SPECIFIED DIMENSIONS ARE IN INCHES
TOLERANCES ON FRACTIONS ± DECIMALS ± ANGLES
DO NOT SCALE THIS DRAWING
MATERIAL

NPG APPROVAL		DATE
[illegible]	[illegible]	[illegible]
WC	[illegible]	[illegible]
WCD	[illegible]	[illegible]
CHECKED	[illegible]	[illegible]
DRAWN	C. B. C.	1-22-53

APPROVED [illegible] USN BY DIRECTION OF THE CHIEF OF BUREAU

CONTAINER, OUTER, FOR CARTRIDGE, IMPULSE, MK 23 TYPE
ASSEMBLY

SCALE	UNIT WT.	JOB ORDER
$\frac{1}{1}$		

DEPARTMENT OF THE NAVY
BUREAU OF ORDNANCE
NAVAL PROVING GROUND
DAHLGREN, VA.

NAVORD DRAWING NO.
1863086

NAVAL SURFACE WARFARE CENTER
INDIAN HEAD MD 20640

APPROVED BY Scott Bumgarner 5 April 2000

Prepared on: 28 MARCH 2000
ECP: 995220G036

DATA LIST: DL419687
FEDERAL STOCK NO.:
DODIC:
TOP ASSEMBLY DRAWING: 2022773
DL REV: D
NOMENCLATURE: CONTAINER, INNER, FOR CARTRIDGE, IMPULSE, MK 23

CAGE	S Z	DOCUMENT NUMBER	REV	DOCUMENT DATE	NO. SH	DOCUMENT TITLE	DOC SYM	DOC REF	R	SC
DATA LISTS										
30003		*DL419688	C	14MAY69	000	CONTAINER, OUTER, MK 23			U	U
Total: 1 DATA LISTS										
DRAWINGS										
30003	B	2015119	C	23MAR00	001	SUPPORT	W		U	U
30003	B	2015120	C	23MAR00	001	TRAY	W		U	U
30003	C	2022773	C	23MAR00	001	CONTAINER, INNER	W		U	U
Total: 3 DRAWINGS										
***MILITARY STANDARDS (BOOK FORM)**										
96906		DOD-STD-2101			000	CLASSIFICATION OF CHARACTERISTICS			U	U
96906		MIL-STD-100			000	ENGINEERING DRAWING PRACTICE			U	U
96906		MIL-STD-129			000	MARKING			U	U
Total: 3 MILITARY STANDARDS (BOOK FORM)										
***MILITARY SPECIFICATIONS**										
83139		MIL-C-10464			000	CANS			U	U
Total: 1 MILITARY SPECIFICATIONS										
***FEDERAL STANDARDS**										
81348		L-T-90			000	TAPE (Cancelled, superseded by A-A-113)			U	U
Total: 1 FEDERAL STANDARD										

CAGE	S Z	DOCUMENT NUMBER	REV	DOCUMENT DATE	NO. SH	DOCUMENT TITLE	DOC SYM	DOC REF	R	SC
***AMERICAN NATIONAL STANDARDS INSTITUTE**										
80204		ASME Y14.38			000	ABBREVIATIONS AND ACRONYMS			U	U
Total: 1 AMERICAN NATIONAL STANDARDS INSTITUTE										
***AMERICAN SOCIETY FOR TESTING AND MATERIALS**										
81346		ASTM D4727			000	CORRUGATED AND SOLID FIBERBOARD SHEET STOCK			U	U
Total: 1 AMERICAN SOCIETY FOR TESTING AND MATERIALS										

TOTAL DOCUMENTS: 11

Symbols in Column:

A = ALTERED ITEM DWG
C = SPEC CONTROL DWG
E = GAGE & TEST EQPT DWG
F = INTFC CONTROL DWG
I = PRODUCTION TOOLING DWG
L = SEL ITEM DWG
Q = SOAP DATA OR DWG
S = SOURCE CONT DWG
W = WR43A ON DWG

Symbols in Column: R

L = LIMITED RIGHTS
U = UNLIMITED RIGHTS

Symbols in SC (Security Classification

C = CONFIDENTIAL
U = UNCLASSIFIED
S = SECRET
T = TOP SECRET

AF in QTY column indicates Qty as required.

\# INDICATES DATA NOT AVAILABLE
* INDICATES DOCUMENTS NOT SUPPLIED WITH TECHNICAL DATA PACKAGE AND MAY BE OBTAINED THRU THE AGENCY INDICATED BY THE FSCM
REF INDICATES DRAWINGS NOT REQUIRED TO DEFINE, PROCURE OR INSPECT THE END ITEM

2015119

REVISIONS			
SYM.	DESCRIPTION	DATE	APPROVAL
A	SEE CN 2015119-A	1-31-68	[illegible]
B	(1-2) SEE DCN 2015119-B		
	TECHNICAL COGNIZANCE		
	CHANGED TO 30003	5-14-69	[illegible]
C	SEE ECP995220G036	2022-08-23	[illegible]

CLASSIFICATION OF CHARACTERISTICS (DOD-STD-2101)	
CRITICAL	NONE
MAJOR	1
MINOR	ALL OTHER CHARACTERISTICS

(B2)

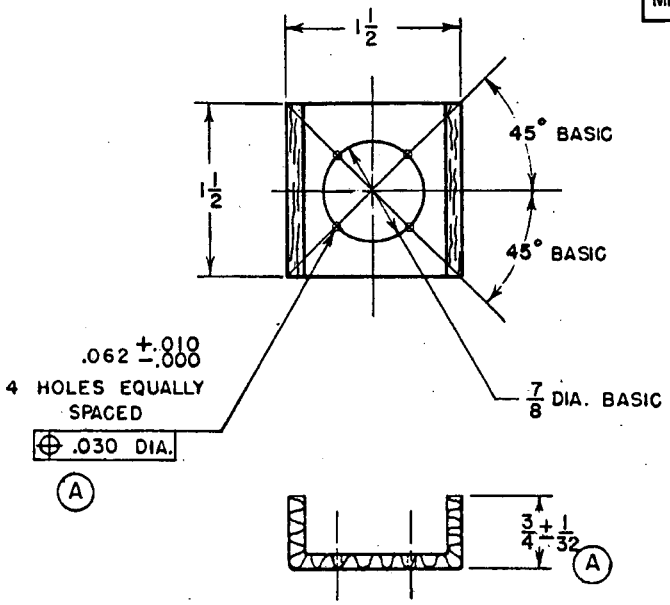

NOTES:

1. INTERPRET DRAWING IN ACCORDANCE WITH MIL-STD-100.
2. (A) INTERPRET ABBREVIATIONS IN ACCORDANCE WITH ASME Y14.38.
3. (M 101) MATERIAL: FIBERBOARD, ASTM D4727, TYPE CF, WEATHER RESISTANT, VARIETY SW, GRADE W5C. DO NOT SCORE MATERIAL TO AID IN FORMING.

(B1)

NAVORD AND NAVAIR APPLICATION

CODE IDENT 30003

2022773	LD 419687
NEXT ASSY.	USED ON
APPLICATION	

UNLESS OTHERWISE SPECIFIED DIMENSIONS ARE IN INCHES
TOLERANCES ON FRACTIONS ± .062
DECIMALS ± . ANGLES

DO NOT SCALE THIS DRAWING

MATERIAL SEE NOTE 3

NPG APPROVAL		DATE
W	VJU	2/20/59
WC	RR	2/20/59
WCD	[illegible]	2/6/59
CHECKED	[illegible]	2/2/59
DRAWN	J. H. W.	

APPROVED 2/20 1959
[illegible] Capt USN
BY DIRECTION OF THE CHIEF OF BUREAU

SUPPORT

SCALE	UNIT WT.	JOB ORDER
1/1		

DEPARTMENT OF THE NAVY
BUREAU OF ORDNANCE

NAVAL PROVING GROUND
DAHLGREN, VA.

BUORD DRAWING NO.
2015119

PRNC-NPG-51 (Rev. 9-57)

2015120

CLASSIFICATION OF CHARACTERISTICS (DOD-STD-2101)	
CRITICAL	NONE
MAJOR	2
MINOR. . . ALL OTHER CHARACTERISTICS	

B4

REVISIONS			
SYM.	DESCRIPTION	DATE	APPROVAL
A	SEE CN 2015120-A	1-25-68	[illegible]
B	(1-4) SEE DCN 2015120-B		
	TECHNICAL COGNIZANCE		
	CHANGE TO 30003	5-14-69	[illegible]
C	SEE ECP 995220G036	00-00-00	[illegible]

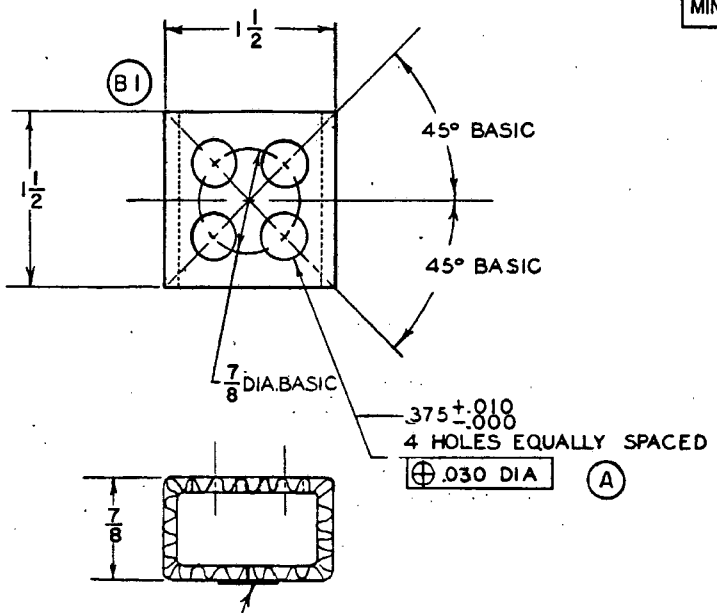

B2

NOTES:

1. INTERPRET DRAWING IN ACCORDANCE MIL-STD-100.
2. INTERPRET ABBREVIATIONS IN ACCORDANCE WITH ASME Y14.38.
3. MATERIAL: FIBERBOARD, ASTM D4727 TYPE CF, WEATHER RESISTANT, VARIETY SW, GRADE W5C. DO NOT SCORE MATERIAL TO AID IN FORMING.

A (M 102)

NAVORD AND NAVAIR APPLIACTION

B3

CODE IDENT 30003

2022773	LD 419687
NEXT ASSY.	USED ON
APPLICATION	

UNLESS OTHERWISE SPECIFIED DIMENSIONS ARE IN INCHES
TOLERANCES ON FRACTIONS ± .062
DECIMALS ± . ANGLES
DO NOT SCALE THIS DRAWING
MATERIAL SEE NOTE 3

NPG APPROVAL		DATE
W	VVJ	2/20/57
WC	RR	2/20/57
WCD	[illegible]	2/20/57
CHECKED	[illegible]	2/20/57
DRAWN	L.B.C.	

APPROVED 2/20 1957
[illegible] Capt USN
BY DIRECTION OF THE CHIEF OF BUREAU

TRAY

SCALE	UNIT WT.	JOB ORDER	
‡			

DEPARTMENT OF THE NAVY
BUREAU OF ORDNANCE
NAVAL PROVING GROUND
DAHLGREN, VA.

BUORD DRAWING NO.
2015120

PRNC-NPG-51 (Rev. 9-57)

CLASSIFICATION OF CHARACTERISTICS (DOD-STD-2101)	
CRITICAL	NONE
MAJOR	5
MINOR	ALL OTHER CHARACTERISTICS

B5

REVISIONS			
SYM.	DESCRIPTION	DATE	APPROVAL
A	SEE CN 2022773-A	1-15-61	[illegible]
B	(1-5) SEE DCN 2022773-B		
	TECHNICAL COGNIZANCE		
	CHANGED TO 30003	5-14-69	[illegible]
C	SEE ECP 995220G036	[illegible]	[illegible]

A NOTES:

1. FOR LIST OF DRAWINGS, ASSEMBLIES, PARTS, SPECIFICATIONS, ETC., SEE DL419687.
2. FOR CONTAINER, OUTER, SEE DL 419688.
3. (B1) (M 102) DETAILS OF APPLYING THE SPECIFIED MARKING, SUCH AS METHOD, DEFINITIONS, LOCATION, SIZE AND MATERIALS, SHALL BE IN ACCORDANCE WITH MIL-STD-129.
4. INTERPRET DRAWING IN ACCORDANCE WITH MIL-STD-100.
5. INTERPRET ABBREVIATIONS IN ACCORDANCE WITH ASME Y14.38M.

(M 103) PC 1. [CAN, METAL, INTEGRAL TEAR STRIP TYPE WITH KEY] DIMENSIONS: 2.062 ±.015 INSIDE DIA X 2.437 ±.015 INSIDE DEPTH AFTER SEALING. COMMERCIAL DESIGNATION: 202X211, STANDARD PACKERS ENDS. (M 104) [CAN MANUFACTURE AND MATERIAL SHALL BE IN ACCORDANCE WITH MIL-C-10464, TYPE I. MATERIAL FOR BODY AND ENDS SHALL BE 90 LBS TO 107 LBS BASE WEIGHT. THE TEAR STRIP SHALL BE LOCATED ADJACENT TO THE END WHICH IS SEAMED BY THE LOADING ACTIVITY.] CAN PURCHASE MAY BE MADE FROM, BUT IS NOT LIMITED TO, THE FOLLOWING FIRMS:

CLARKE CAN CO., 7520 STATE ROAD, PHILADELPHIA, PA.
ELLISCO INC., AMERICAN AND LUZERNE STREETS, PHILADELPHIA, PA.

(M 105) PC 2. SPACER. [MATERIAL: FIBERBOARD, ASTM D4727. TYPE CF, WEATHER RESISTANT, VARIETY SW, GRADE OPTIONAL. A MINIMUM OF ONE SPACER SHALL BE USED AS SHOWN AND ADDITIONAL SPACERS SHALL BE USED AS REQUIRED FOR A TIGHT PACK. A TIGHT PACK IS MANDATORY.] DIMENSIONS: 2.000 ±.032 DIA.

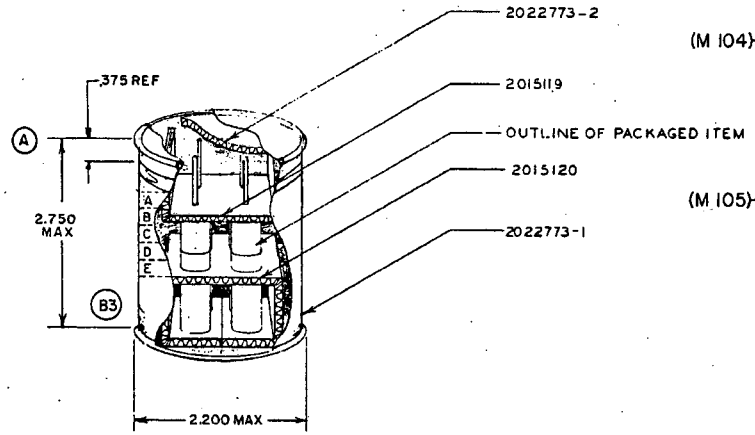

A

B2

REQUIRED MARKING (M 101)
SEE NOTE 3

A. FEDERAL STOCK NO. AND DOD CODE
B. CARTRIDGE NOMENCLATURE
C. CARTRIDGE ASSEMBLY DRAWING NO.
D. QUANTITY
E. LOT NO. - MANUFACTURER'S SYMBOL-CARTRIDGE LOADING DATE (MONTH & YEAR)

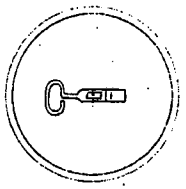

A

4	CARTRIDGE, IMPULSE, MARK 23 MOD 0
QTY.	PACKAGED ITEM
	USED FOR

2022773

NAVORD AND NAVAIR APPLICATION

B4 CODE IDENT 30003

A

	LD 491837
NEXT ASSY.	USED ON

UNLESS OTHERWISE SPECIFIED DIMENSIONS ARE IN INCHES
TOLERANCES ON FRACTIONS ± DECIMALS ± . ANGLES
DO NOT SCALE THIS DRAWING
MATERIAL

NPG APPROVAL		DATE
W	VVU	2/20/59
WG	RR	2/20/59
WCD	[illegible]	2/6/59
CHECKED	[illegible]	2/2/59
DRAWN	L.B.C.	2/2/59
APPROVED	[illegible] 2/20 1959	

CONTAINER, INNER FOR CARTRIDGE, IMPULSE, MK 23 TYPE ASSEMBLY

SCALE 1 | UNIT WT. | JOB ORDER

DEPARTMENT OF THE NAVY
BUREAU OF ORDNANCE
NAVAL PROVING GROUND
DAHLGREN, VA.

BUORD DRAWING NO. 2022773

CLASSIFICATION OF CHARACTERISTICS (DOD-STD-2101)	
CRITICAL-	NONE
MAJOR-	1
MINOR-	ALL OTHER CHARACTERISTICS

REVISIONS			
REV	DESCRIPTION	DATE	APPROVAL

NOTES:

1. INTERPRET DRAWING IN ACCORDANCE WITH ASME 14.5M-1994 AND ASME Y14.100-2004 WITH APPENDICES B, C, D, AND E.

2. FOR LIST OF DRAWINGS SEE DL3205AS285.

(M101) 3. BEFORE LOADING, ELECTROCHEMICALLY ETCH MARKINGS FOR LOT NUMBER, SERIAL NUMBER, AND CARTRIDGE IDENTIFICATION NUMBER ONTO CUTTING PUNCH, FIND NO. 2, APPROXIMATELY AS SHOWN IN ACCORDANCE WITH MIL-STD-130. LOT NUMBER SHALL BE IN ACCORDANCE WITH MIL-STD-1168. SERIAL NUMBER MAY BE HAND INKED USING, PERMANENT MARKER, FIND NO. 6, IN ACCORDANCE WITH MIL-STD-130.

(M102) 4. OVEN DRY PROPELLANT, FIND NO. 3, AT 165°F FOR A MINIMUM OF FOUR (4) HOURS PRIOR TO EACH DAY'S LOADING OPERATIONS.

(M103) 5. LOAD 140±5 MILLIGRAMS OF PROPELLANT, FIND NO. 3 INTO CARTRIDGE SUB-ASSEMBLY MACHINED, FIND NO. 1.

(M104) 6. LUBRICATE O-RING, FIND NO. 4 WITH LUBRICANT, FIND NO. 7. INSTALL O-RING ON THE CUTTING PUNCH, FIND NO. 2. REMOVE EXCESS LUBRICANT. INSERT CUTTING CASE AND FILTER ASSEMBLY, FIND NO. 1, AND CRIMP 360°. THE COIL OF THE BRIDGEWIRE SHALL NOT BE DEFORMED DURING ASSEMBLY OF THE CUTTING PUNCH, FIND NO. 2.

(M105) 7. APPLY CONTINUOUS BEAD OF RESIN, EPOXY, FIND NO. 5, 360° AROUND CRIMP FILLING GAP AS SHOWN. REMOVE EXCESS EPOXY. APPLY A CONTINUOUS FILLET OF EPOXY RESIN, FIND NO. 5, TO COMPLETELY COVER THE CAPACITOR ON THE CARTRIDGE SUBASSEMBLY, MACHINED, FIND NO. 1, AS SHOWN. NO EPOXY RESIN SHALL BE ON THE BACK FACE OF THE CARTRIDGE. NO EPOXY RESIN SHALL BE ON THE LENGTH OF THE PIN WHICH EXTENDS ABOVE THE BACK FACE OF THE CARTRIDGE, WITH THE EXCEPTION OF A MINISCUS.

(M106) 8. EACH CARTRIDGE OF THE PRODUCTION LOT SHALL BE ACCEPTED BY A RECEIVER GAGE IN ACCORDANCE WTIH DRAWING 10001-929845 OR A GAGE WITH EQUAL GAGING SURFACE DIMENSIONS. ACCEPTANCE BY THIS GAGE WILL BE SUFFICIENT VERFICATION OF CHARACTERISTIC.

(C1) 9. RESISTANCE OF ASSEMBLED CARTRIDGE, PIN TO CASE SHALL BE 1.0±.1 OHMS.

10. ALL REQUIREMENTS OF MIL-DTL-????? APPLY.

11. PACKAGING SHALL BE IN ACCORDANCE WITH DL419688 AND DL419687, EXCEPT THAT ANY REFERENCE TO "MK23 MOD 0" SHALL BE REPLACED BY THE NOMENCLATURE OF THIS CARTRIDGE: "CCU-XXX/B IMPULSE CARTRIDGE".

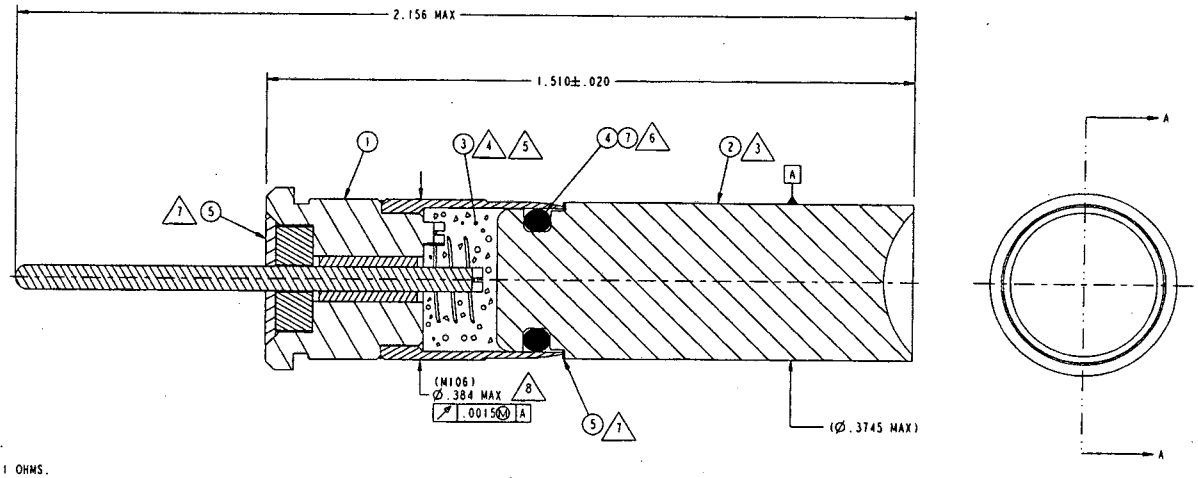

SECTION A-A

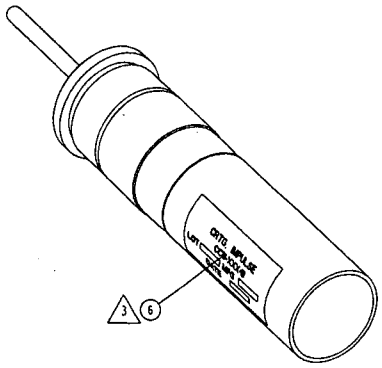

FIND NO	QTY REQ	CAGE CODE	PART OR IDENTIFYING NUMBER	SPECIFICATION NUMBER	NOMENCLATURE OR DESCRIPTION	MATERIAL OR NOTE
7	AR	14083	838AS129		LUBRICANT, O-RING	
6	AR	14083	SAN-13801		PERMANENT MARKER, EXTRA FINE POINT, BLACK INK	SANFORD CORP
5	AR	14083	707AS114		RESIN, EPOXY	7
4	1	14083	NAS 1611-9		PACKING, ETHYLENE PROPYLENE PREFORMED ORING	
3	140 mg	14083	838AS207		PROPELLANT, DOUBLE BASE	
2	1	14083	SK06040-E216M-8		CUTTING PUNCH	
1	1	14083	SK06040-E216M-1		CARTRIDGE CASE SUB-ASSEMBLY, MACHINED	

PARTS LIST

NEXT ASSY	USED ON
APPLICATION	

UNLESS OTHERWISE SPECIFIED DIMENSIONS ARE IN INCHES
GENERAL TOLERANCES
XX DECIMALS ± —
XXX DECIMALS ± —
ANGLES ± —
MATERIAL:
DO NOT SCALE DRAWING

INDIAN HEAD DIVISION
NAVAL SURFACE WARFARE CENTER
INDIAN HEAD, MD 20640-5035

ENGINEER
ENGINEER
CHECKED
DRAWN
APPROVED FOR NSWCIH — DATE

SKETCH APPROVED
MAY 25, 2006

DEPARTMENT OF THE NAVY
NAVAL SURFACE WARFARE CENTER
INDIAN HEAD, MD 20640-5035

MODIFIED M161
CARTRIDGE

SIZE	CAGE CODE	DRAWING NUMBER
D	14083	SK06040-E216M

SCALE: NONE — SHEET 1 OF 1

CLASSIFICATION OF CHARACTERISTICS (DOD-STD-2101)	
CRITICAL-	NONE
MAJOR-	1
MINOR-	ALL OTHER CHARACTERISTICS

REVISIONS			
REV	DESCRIPTION	DATE	APPROVAL

NOTES:

1. INTERPRET DRAWING IN ACCORDANCE WITH ASME Y14.5M-1994 AND ASME Y14.100-2004 WITH APPENDICES B, C, D, AND E.
2. MATERIAL: MAKE FROM SK-13, CARTRIDGE CASE SUB-ASSEMBLY, WELDED.
3. (M101) MACHINE OUTSIDE DIAMETER OF CARTRIDGE CASE SUB-ASSEMBLY, WELDED, TO .383±.001 INCHES, TWO PLACES AS SHOWN.

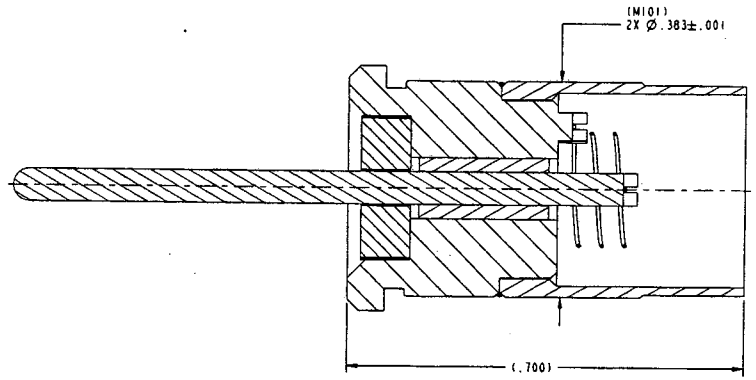

SECTION A-A

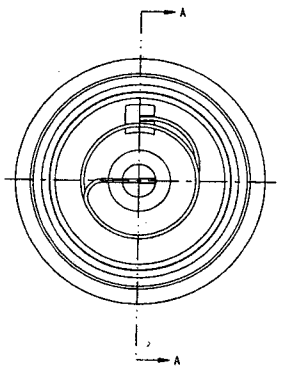

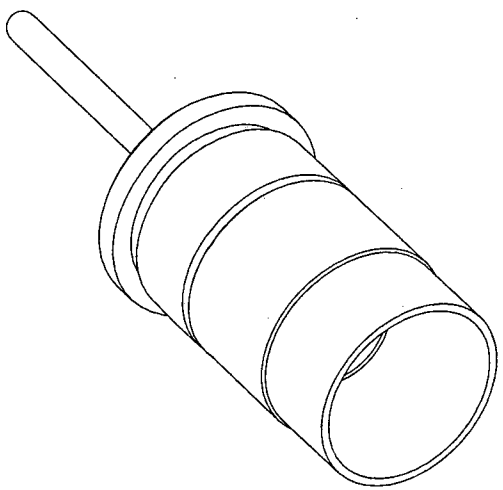

NEXT ASSY	USED ON
APPLICATION	

UNLESS OTHERWISE SPECIFIED DIMENSIONS ARE IN INCHES
GENERAL TOLERANCES
XX DECIMALS ± —
XXX DECIMALS ± —
ANGLES ± —
MATERIAL: 2
DO NOT SCALE DRAWING

INDIAN HEAD DIVISION
NAVAL SURFACE WARFARE CENTER
INDIAN HEAD, MD 20640-5035

ENGINEER	
ENGINEER	SKETCH APPROVED MAY 25, 2006
CHECKED	
DRAWN	
APPROVED FOR NSWC	DATE

DEPARTMENT OF THE NAVY
NAVAL SURFACE WARFARE CENTER
INDIAN HEAD, MD 20640-5035

CARTRIDGE CASE
SUB-ASSEMBLY, MACHINED

SIZE	CAGE CODE	DRAWING NUMBER
D	14083	SK06040-E216M-1

SCALE: NONE SHEET 1 OF 1

CLASSIFICATION OF CHARACTERISTICS (DOD-STD-2101)	
CRITICAL-	NONE
MAJOR-	1
MINOR-	ALL OTHER CHARACTERISTICS

REVISIONS			
REV	DESCRIPTION	DATE	APPROVAL

NOTES:

1. INTERPRET DRAWING IN ACCORDANCE WITH ASME 14.5M-1994 AND ASME Y14.100-2004 WITH APPENDICES B, C, D, AND E.

(M101) 2. LASER BEAM WELD CASE AND BRIDGEWIRE ASSEMBLY, FIND NO. 1. TO SLEEVE, FIND NO. 2. FULL 360°.

3. WELD FILLET SHALL NOT EXCEED Ø.381 ON THE OUTSIDE DIAMETER.

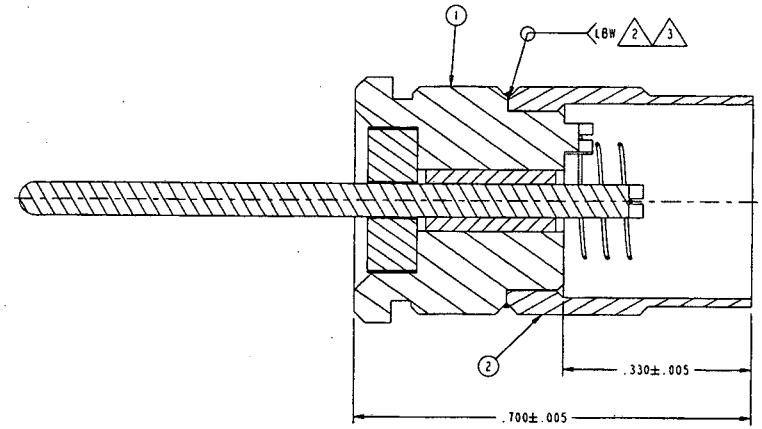

SECTION A-A

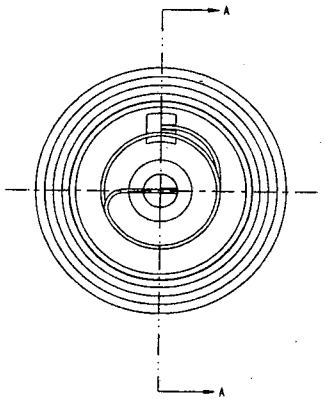

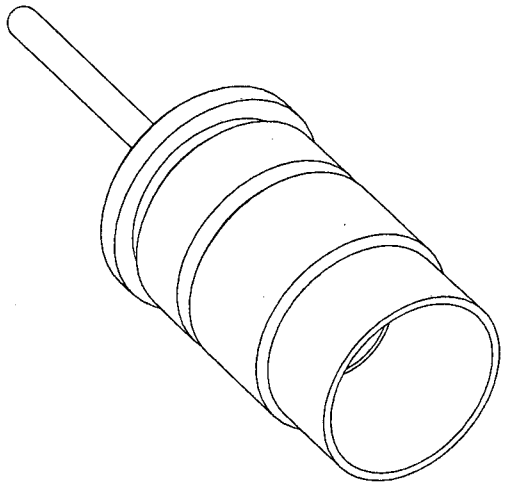

FIND NO	QTY REQ	CAGE CODE	PART OR IDENTIFYING NUMBER	SPECIFICATION NUMBER	NOMENCLATURE OR DESCRIPTION	MATERIAL OR NOTE
2	1	14083	SK06040-E216M-11		SLEEVE	
1	1	14083	SK06040-E216M-3		CASE AND BRIDGEWIRE ASSEMBLY	

PARTS LIST

NEXT ASSY	USED ON
APPLICATION	

UNLESS OTHERWISE SPECIFIED DIMENSIONS ARE IN INCHES
GENERAL TOLERANCES
XX DECIMALS ± —
XXX DECIMALS ± —
ANGLES ± —
MATERIAL:
DO NOT SCALE DRAWING

INDIAN HEAD DIVISION
NAVAL SURFACE WARFARE CENTER
INDIAN HEAD, MD 20640-5035

ENGINEER
ENGINEER SKETCH APPROVED
CHECKED MAY 25, 2006
DRAWN
APPROVED FOR NSWCIH DATE

DEPARTMENT OF THE NAVY
NAVAL SURFACE WARFARE CENTER
INDIAN HEAD, MD 20640-5035

CARTRIDGE SUB-ASSEMBLY, WELDED

SIZE	CAGE CODE	DRAWING NUMBER
D	14083	SK06040-E216M-2

SCALE: NONE SHEET 1 OF 1

NOTES:

1. INTERPRET DRAWING IN ACCORDANCE WITH ASME 14.5M-1994 AND ASME Y14.100-2004 WITH APPENDICES B, C, D, AND E.

(M101) 2. THE COILS OF THE BRIDGEWIRE, FIND NO. 2, SHALL NOT TOUCH EACH OTHER.

3. PRIOR TO LASER BEAM WELD, CRIMP FIND NO. 2, TO FIND NO. 1 IN TWO PLACES.

(M102) 4. LASER WELD THE BRIDGEWIRE IN TWO PLACES AS SHOWN.

5. RESISTANCE OF SUBASSEMBLY AFTER LASER BEAM WELDING SHALL BE 1.0 OHMS, PLUS OR MINUS 0.1 OHMS.

CLASSIFICATION OF CHARACTERISTICS (DOD-STD-2101)	
CRITICAL-	NONE
MAJOR-	2
MINOR-	ALL OTHER CHARACTERISTICS

REVISIONS			
REV	DESCRIPTION	DATE	APPROVAL

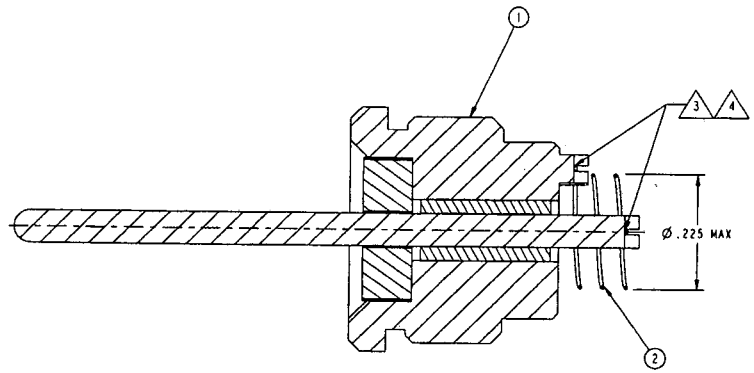

SECTION A-A

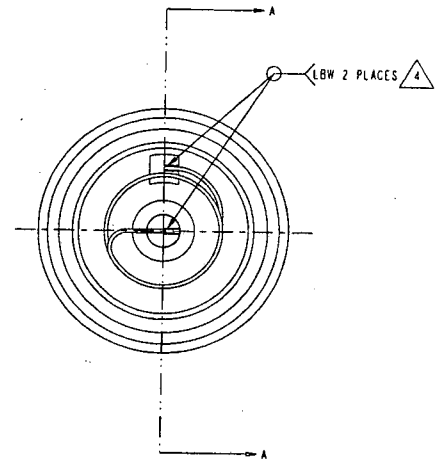

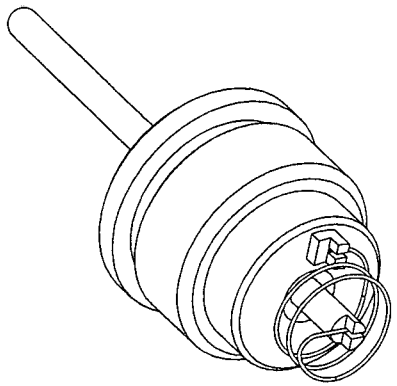

FIND NO	QTY REQ	CAGE CODE	PART OR IDENTIFYING NUMBER	SPECIFICATION NUMBER	NOMENCLATURE OR DESCRIPTION	MATERIAL OR NOTE
		14083	SK06040-E216M-9		BRIDGEWIRE	2
1	1	14083	SK06040-E216M-4		CASE AND FILTER ASSEMBLY	

PARTS LIST

NEXT ASSY	USED ON
APPLICATION	

UNLESS OTHERWISE SPECIFIED DIMENSIONS ARE IN INCHES
GENERAL TOLERANCES
XX DECIMALS ± —
XXX DECIMALS ± —
ANGLES ± —
MATERIAL:
DO NOT SCALE DRAWING

INDIAN HEAD DIVISION
NAVAL SURFACE WARFARE CENTER
INDIAN HEAD, MD 20640-5035

ENGINEER		
ENGINEER	SKETCH APPROVED	
CHECKED	MAY 25, 2006	
DRAWN		
APPROVED FOR NSWCIH		DATE

DEPARTMENT OF THE NAVY
NAVAL SURFACE WARFARE CENTER
INDIAN HEAD, MD 20640-5035

CASE AND BRIDGEWIRE ASSEMBLY

SIZE	CAGE CODE	DRAWING NUMBER
D	14083	SK06040-E216M-3

SCALE: NONE SHEET 1 OF 1

CLASSIFICATION OF CHARACTERISTICS (DOD-STD-2101)	
CRITICAL-	NONE
MAJOR-	1
MINOR-	ALL OTHER CHARACTERISTICS

REVISIONS			
REV	DESCRIPTION	DATE	APPROVAL

NOTES:

1. INTERPRET DRAWING IN ACCORDANCE WITH ASME 14.5M-1994 AND ASME Y14.100-2004 WITH APPENDICES B, C, D, AND E.
2. SOLDER CAPACITOR, FIND NO. 2, TO GLASS TO METAL SEAL ASSEMBLY, FIND NO. 1, USING SILVER BEARING SOLDER, FIND NO. 3.

(M101) 3. EVIDENCE OF 360° FILLET OF SOLDER TO CAPACITOR AND GLASS TO METAL SEAL ASSEMBLY IS REQUIRED.

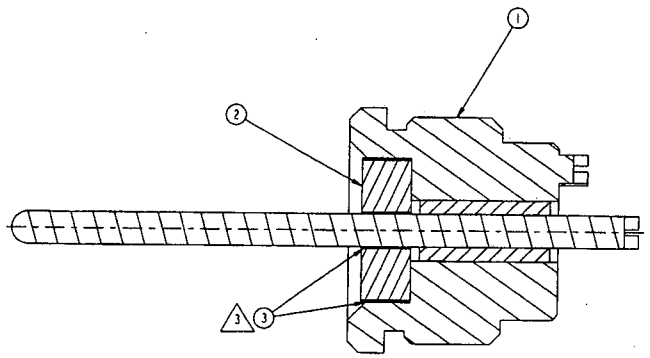

SECTION A-A

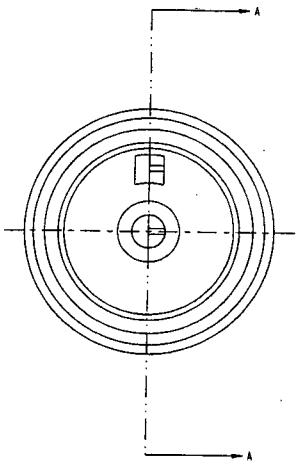

FIND NO	QTY REQ	CAGE CODE	PART OR IDENTIFYING NUMBER	SPECIFICATION NUMBER	NOMENCLATURE OR DESCRIPTION	MATERIAL OR NOTE
3	AR	14083	QQ-S-571		SILVER BEARING SOLDER	
2	1	14083	SK06040-E216M-10		CAPACITOR	3
1	1	14083	SK06040-E216M-5		GLASS TO METAL SEAL ASSEMBLY	

PARTS LIST

NEXT ASSY	USED ON
APPLICATION	

UNLESS OTHERWISE SPECIFIED DIMENSIONS ARE IN INCHES
GENERAL TOLERANCES
XX DECIMALS ± —
XXX DECIMALS ± —
ANGLES ± —
MATERIAL:
DO NOT SCALE DRAWING

INDIAN HEAD DIVISION
NAVAL SURFACE WARFARE CENTER
INDIAN HEAD, MD 20640-5035

ENGINEER	
ENGINEER	SKETCH APPROVED
CHECKED	MAY 25,2006
DRAWN	
APPROVED FOR NSWC/IH	DATE

DEPARTMENT OF THE NAVY
NAVAL SURFACE WARFARE CENTER
INDIAN HEAD, MD 20640-5035

CASE AND FILTER ASSEMBLY

SIZE	CAGE CODE	DRAWING NUMBER
D	14083	SK06040-E216M-4

SCALE: NONE | SHEET 1 OF 1

CLASSIFICATION OF CHARACTERISTICS (DOD-STD-2101)	
CRITICAL-	I
MAJOR-	I
MINOR-	ALL OTHER CHARACTERISTICS

REVISIONS			
REV	DESCRIPTION	DATE	APPROVAL

NOTES:

1. INTERPRET DRAWING IN ACCORDANCE WITH ASME 14.5M-1994 AND ASME Y14.100-2004 WITH APPENDICES B, C, D, AND E.

(C1) 2. CASE, FIND NO. 1, AND CONTACT PIN, FIND NO. 2, SHALL BE JOINED IN A GLASS TO METAL BOND USING GLASS INSULATION. FIND NO. 3, EXPOSED GLASS SURFACES OF THE COMPLETED ASSEMBLY SHALL BE FLUSH $^{+.000}_{-.030}$ TO SURFACE "A" AND SURFACE "B".

3. CASE, FIND NO. 1, AND CONTACT PIN, FIND NO. 2, SHALL BE INDEXED SUCH THAT THE SLOTS ON EACH PART ARE PARALLEL.

(M101) 4. BONDED ASSEMBLY SHALL BE CAPABLE OF WITHSTANDING A PRESSURE OF 15,000 PSI ±500 PSI WHEN APPLIED TO SURFACE "A". THERE SHALL BE NO DAMAGE TO GLASS OR PARTS AND NO MOVEMENT BETWEEN PARTS AFTER TESTING.

5. ELECTRICAL RESISTANCE BETWEEN CONTACT PIN, FIND NO. 2, AND CASE, FIND NO. 1, OF BONDED ASSEMBLY SHALL BE 5 MEGAOHMS MINIMUM USING A SUPPLY VOLTAGE OF 100±10 VDC.

6. A COMMERCIAL EQUIVALENT CAN BE USED FOR GLASS INSULATION, FIND NO. 3.

7. DESCALE AND CLEAN THE ASSEMBLY AND CHECK FOR PASSIVE SURFACE USING SAE-AMS-STD-753, METHOD 102.

8. TIN PLATE .0002-.0003 THICK PER ASTM-B-545 OVER A .0001-.0002 THICK COPPER UNDERPLATE PER MIL-C-14550. PLATE ONLY SURFACES BOUND BY EXTRA HEAVY WEIGHT LINE. ALL OTHER SURFACES SHALL BE FREE OF PLATING.

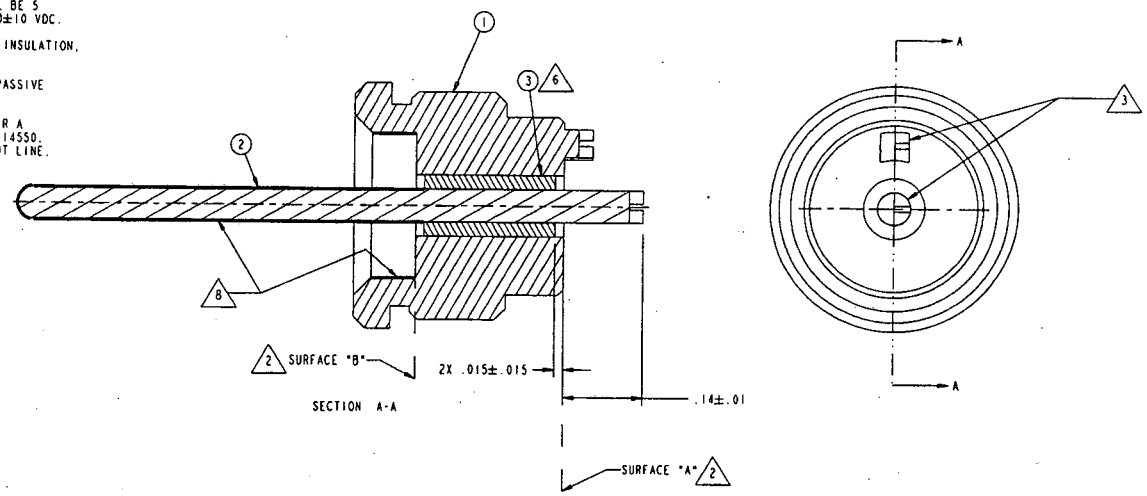

SECTION A-A

FIND NO	QTY REQ	CAGE CODE	PART OR IDENTIFYING NUMBER	SPECIFICATION NUMBER	NOMENCLATURE OR DESCRIPTION	MATERIAL OR NOTE
3	1	14083	SK3205AS245		INSULATION, GLASS	
2	1	14083	SK06040-E216M-7		PIN, CONTACT	6
1	1	14083	SK06040-E216M-6		CASE	

PARTS LIST

NEXT ASSY	USED ON
APPLICATION	

UNLESS OTHERWISE SPECIFIED DIMENSIONS ARE IN INCHES
GENERAL TOLERANCES
XX DECIMALS ± —
XXX DECIMALS ± —
ANGLES ± —
MATERIAL:
DO NOT SCALE DRAWING

INDIAN HEAD DIVISION
NAVAL SURFACE WARFARE CENTER
INDIAN HEAD, MD 20640-5035

ENGINEER
ENGINEER
CHECKED
DRAWN
APPROVED FOR NSWCIH — DATE

SKETCH APPROVED
MAY 25,2006

DEPARTMENT OF THE NAVY
NAVAL SURFACE WARFARE CENTER
INDIAN HEAD, MD 20640-5035

GLASS TO METAL SEAL ASSEMBLY

SIZE	CAGE CODE	DRAWING NUMBER
D	14083	SK06040-E216M-5

SCALE: NONE — SHEET 1 OF 1

NOTES:

1. INTERPRET DRAWING IN ACCORDANCE WITH ASME 14.5M-1994 AND ASME Y14.100-2004 WITH APPENDICES B, C, D, AND E.
2. UNLESS OTHERWISE SPCIFIED:
   REMOVE ALL BURRS AND BREAK SHARP EDGES R.020 MAX.
   FILLETS R.010 MAX
   SURFACE TEXTURE 125.

   ALL DIAMETERS ⌖ .005 A.
3. FULL RADIUS PERMITTED IN BOTTOM OF SLOT. MAXIMUM MISMATCH FROM SLOT TO FLAT IS .005. SLOT SHALL NOT UNDERCUT FLAT.

CLASSIFICATION OF CHARACTERISTICS (DOD-STD-2101)	
CRITICAL-	NONE
MAJOR-	1
MINOR-	ALL OTHER CHARACTERISTICS

REVISIONS			
REV	DESCRIPTION	DATE	APPROVAL

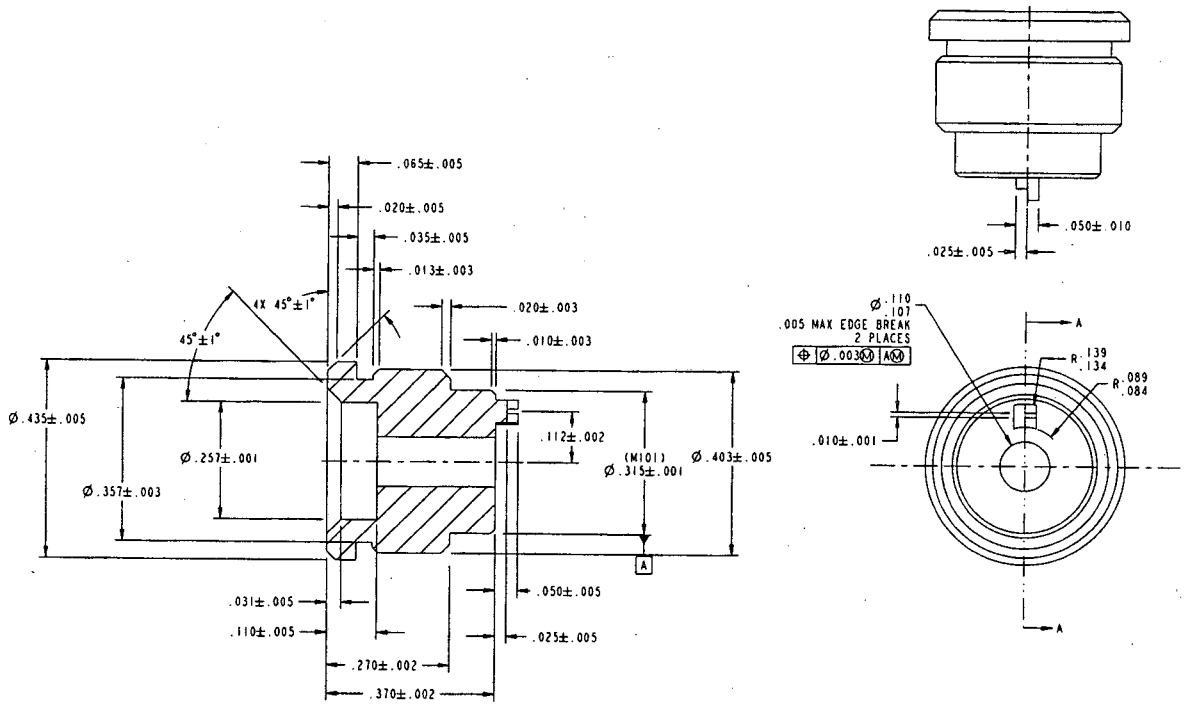

SECTION A-A

NEXT ASSY	USED ON	
APPLICATION		

UNLESS OTHERWISE SPECIFIED DIMENSIONS ARE IN INCHES
GENERAL TOLERANCES
XX DECIMALS ± —
XXX DECIMALS ± 0.005
ANGLES ± 1.0°

MATERIAL:
CRES TYPE 304 L
CONDITION A
PER ASTM A276 OR
SAE AMS-QQ-S-763

DO NOT SCALE DRAWING

INDIAN HEAD DIVISION
NAVAL SURFACE WARFARE CENTER
INDIAN HEAD, MD 20640-5035

ENGINEER		
ENGINEER	SKETCH APPROVED	
CHECKED	MAY 25, 2006	
DRAWN		
APPROVED FOR NSWCIH		DATE

DEPARTMENT OF THE NAVY
NAVAL SURFACE WARFARE CENTER
INDIAN HEAD, MD 20640-5035

CASE

SIZE	CAGE CODE	DRAWING NUMBER
D	14083	SK06040-E216M-6

SCALE: NONE | SHEET 1 OF 1

NOTES:

1. INTERPRET DRAWING IN ACCORDANCE WITH ASME 14.5M-1994 AND ASME Y14.100-2004 WITH APPENDICES B, C, D, AND E.
2. FULL RADIUS PERMITTED IN BOTTOM OF SLOT. MAXIMUM MISMATCH FROM SLOT TO FLAT IS .005. SLOT SHALL NOT UNDERCUT FLAT.
3. UNLESS OTHERWISE SPECIFIED: REMOVE ALL BURRS AND BREAK SHARP EDGES. SURFACE TEXTURE 63 ✓.

CLASSIFICATION OF CHARACTERISTICS (DOD-STD-2101)	
CRITICAL-	NONE
MAJOR-	3
MINOR-	ALL OTHER CHARACTERISTICS

REVISIONS			
REV	DESCRIPTION	DATE	APPROVAL

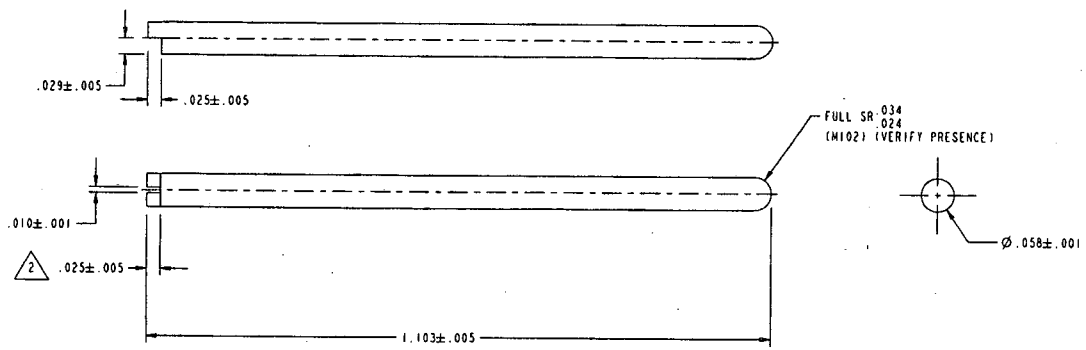

NEXT ASSY	USED ON
APPLICATION	

UNLESS OTHERWISE SPECIFIED DIMENSIONS ARE IN INCHES
GENERAL TOLERANCES
XX DECIMALS ± —
XXX DECIMALS ± 0.005
ANGLES ± —

MATERIAL:
IRON-NICKEL ALLOY
SAE AMS-I-23011, CLASS 2
(M103)

DO NOT SCALE DRAWING

INDIAN HEAD DIVISION
NAVAL SURFACE WARFARE CENTER
INDIAN HEAD, MD 20640-5035

ENGINEER		
ENGINEER	SKETCH APPROVED	
CHECKED	MAY 25, 2006	
DRAWN		
APPROVED FOR NSWCIH		DATE

DEPARTMENT OF THE NAVY
NAVAL SURFACE WARFARE CENTER
INDIAN HEAD, MD 20640-5035

PIN, CONTACT

SIZE	CAGE CODE	DRAWING NUMBER
D	14083	SK06040-E216M-7

SCALE: NONE | SHEET 1 OF 1

CLASSIFICATION OF CHARACTERISTICS (DOD-STD-2101)
CRITICAL- NONE
MAJOR- NONE
MINOR- ALL CHARACTERISTICS

REVISIONS			
REV	DESCRIPTION	DATE	APPROVAL
	SGR SK05078-5230P	2005-10-31	

CAD MAINTAINED. CHANGES SHALL BE INCORPORATED BY THE DESIGN ACTIVITY.

NOTES:

1. INTERPRET DRAWING IN ACCORDANCE WITH ASME Y14.100-2000 WITH APPENDICES B, C, D AND E.

2. GLASS PHYSICAL PROPERTIES:

THERMAL EXPANSION COEFFICIENT 20 - 300°C (10^{-7}/°C)	93
CONTRACTION COEFFICIENT 20°C - ANNEALING POINT (10^{-7}/°C)	104
STRAIN POINT (°C)	450
ANNEALING POINT (°C)	480
Tg (°C)	467
SOFTENING POINT (°C)	677
WORKING POINT (°C)	1035
DENSITY (gm/cc)	2.60
REFRACTIVE INDEX	1.51
DIELECTRIC PROPERTIES @ 1 Mc & 20°C P.F. %	.21
DIELECTRIC CONSTANT	6.7
LOSS FACTOR %	1.41

3. THERMAL EXPANSION COEFFICIENT: THE AVERAGE DIMENSIONAL CHANGE PER UNIT OF MEASUREMENT PER °C AS THE TEMPERATURE IS INCREASED OVER THE TEMPERATURE RANGE.

4. CONTRACTION COEFFICIENT: THE AVERAGE DIMENSIONAL CHANGE PER UNIT OF MEASUREMENT PER °C AS THE TEMPERATURE IS DECREASED OVER THE TEMPERATURE RANGE.

5. STRAIN POINT: THE TEMPERATURE CORRESPONDING TO A VISCOSITY OF $10^{14.5}$ POISES, REPRESENTS THE TEMPERATURE AT WHICH INTERNAL STRAINS WILL BE REDUCED TO ACCEPTABLE. VALUES IN FOUR HOURS.

6. ANNEALING POINT: THE TEMPERATURE CORRESPONDING TO A VISCOSITY OF $10^{13.0}$ POISES, REPRESENTS THE TEMPERATURE AT WHICH INTERNAL STRAINS WILL BE REDUCED TO ACCEPTABLE VALUES IN 15 MINUTES.

7. Tg TEMPERATURE: THE TEMPERATURE RANGE IN WHICH GLASS GRADUALLY TRANSFORMS FROM A BRITTLE TO A PLASTIC STATE, AND THE STRESS IN THE GLASS MAY BE COMPLETELY RELIEVED WITHIN 30 MINUTES WHEN HEATED 5 TO 15 °C ABOVE THE Tg TEMPERATURE.

8. SOFTENING POINT: THE TEMPERATURE CORRESPONDING TO A VISCOSITY OF $10^{7.6}$ POISES, REPRESENTS THE TEMPERATURE AT WHICH THE SAMPLE WILL DEFORM UNDER STRESS OF ITS OWN WEIGHT.

9. WORKING POINT: THE TEMPERATURE CORRESPONDING TO A VISCOSITY OF 10^4 POISES, AND ARBITRARY VISCOSITY CHOSEN REPRESENTING THE RANGE WHERE MOST WORKING IS USUALLY ACCOMPLISHED.

10. DENSITY: WEIGHT PER UNIT VOLUME AS MEASURED ON AN ANNEALED GLASS SAMPLE AT ROOM TEMPERATURE.

11. REFRACTIVE INDEX: THE RATIO OF THE VELOCITY OF MONOCHROMATIC LIGHT (SODIUM D LINE 589.3 MU), IN ANNEALED GLASS SAMPLES AS COMPARED TO AIR.

12. P.F.%: A MEASURE OF ELECTRICAL ENERGY LOSS IN A MATERIAL WHEN IT IS SUBJECTED TO AN ALTERNATING SINE WAVE VOLTAGE. IT IS EQUAL TO THE COSINE OF THE ANGLE BETWEEN THE ALTERNATING VOLTAGE AND CURRENT.

13. DIELECTRIC CONSTANT: A MEASURE OF THE PROPERTY WHICH DETERMINES THE ELECTROSTATIC ENERGY STORED PER UNIT VOLUME FOR UNIT POTENTIAL GRADIENT. IT IS NUMBERIC AND EXPRESSED AS A RATIO TO THE DIELECTRIC CONSTANT OF A VACUUM.

14. LOSS FACTOR %: A MEASURE OF THE ELECTRICAL ENERGY THAT IS LOST AND CONVERTED INTO HEAT IN A DIELECTRIC SUBJECTED TO A VARYING ELECTRIC FIELD. IT IS THE PRODUCT OF THE POWER FACTOR AND THE DIELECTRIC CONSTANT.

ONLY THE ITEMS DESCRIBED ON THIS DRAWING ARE APPROVED FOR USE IN THE APPLICATION(S) SPECIFIED HEREON. A SUBSTITUTE ITEM SHALL NOT BE USED WITHOUT PRIOR APPROVAL BY THE COGNIZANT DESIGN ACTIVITY.

IDENTIFICATION OF THE APPROVED SOURCE(S) OF SUPPLY HEREON IS NOT TO BE CONSTRUED AS A GUARANTEE OF PRESENT OR CONTINUED AVAILABILTY. AS A SOURCE OF SUPPLY FOR THE ITEM DESCRIBED ON THE DRAWING.

APPROVED SOURCE(S) OF SUPPLY		
VENDOR		
NAME AND ADDRESS	CAGE CODE	PART NUMBER
SCHOTT CORP 3 ODELL PLACE TONKERS, NY 10701-1405	S-8061	S-8061

SOURCE CONTROL DRAWING

DISTRIBUTION STATEMENT C:
DISTRIBUTION AUTHORIZED TO U.S. GOVERNMENT AGENCIES AND THEIR CONTRACTORS, ADMINISTRATIVE OR OPERATIONAL USE, 2005-06-16. OTHER REQUESTS FOR THIS DOCUMENT SHALL BE REFERRED TO COMMANDER, INDIAN HEAD DIVISION, NAVAL SURFACE WARFARE CENTER, 101 STRAUSS AVENUE INDIAN HEAD, MD. 20640-5035.

NEXT ASSY	USED ON
SK3205AS238	SK3205AS235
APPLICATION	

UNLESS OTHERWISE SPECIFIED DIMENSIONS ARE IN INCHES
GENERAL TOLERANCES
XX DECIMALS ±—
XXX DECIMALS ±—
ANGLES ±—
MATERIAL: —
DO NOT SCALE DRAWING

INDIAN HEAD DIVISION
NAVAL SURFACE WARFARE CENTER
INDIAN HEAD, MD 20640-5035

ENGINEER: David Horsley 1/27/06
ENGINEER:
CHECKED:
DRAWN: NSWC IH 2003-06-16
APPROVED FOR NAVAIR: Anna R. Mulkerin 1/27/06 DATE

DEPARTMENT OF THE NAVY
NAVAL AIR SYSTEMS COMMAND
PATUXENT RIVER, MD. 20670-1620

INSULATION, GLASS

SIZE	CAGE CODE	DRAWING NUMBER
D	30003	SK3205AS245

SCALE: NONE WEIGHT: --- SHEET 1 OF 1

NOTES:

1. INTERPRET DRAWING IN ACCORDANCE WITH ASME Y14.5M-1994 AND ASME Y14.100-2004 WITH APPENDICES B, C, D, AND E.
2. ONLY THE ITEMS DESCRIBED ON THIS DRAWING ARE APPROVED FOR USE IN THE APPLICATION(S) SPECIFIED HEREON. A SUBSTITUTE ITEM SHALL NOT BE USED WITHOUT PRIOR APPROVAL BY THE CONGNIZANT DESIGN ACTIVITY.
3. IDENTIFICATION OF THE APPROVED ITEMS HEREON IS NOT TO BE CONSTRUED AS A GUARANETEE OF PRESENT OR CONTINUED AVAILABILITY.

CLASSIFICATION OF CHARACTERISTICS (DOD-STD-2101)	
CRITICAL-	NONE
MAJOR-	NONE
MINOR-	ALL CHARACTERISTICS

REVISIONS			
REV	DESCRIPTION	DATE	APPROVAL

APPROVED SOURCES OF SUPPLY		
NAME AND ADDRESS	PART NUMBER	CAGE CODE
SPECTRUM CONTROL TECHNOLOGY, INC. 4100 WICHOUD BLVD. NEW ORLEANS, LA 70129	248065A5704P6B0	OLR95
SYFER TECHNOLOGY LIMITED OLD STOKE ROAD ARMINGHALL, NORWICH, NORFOLK NR14 8SO UNITED KINGDOM	2507G0500704PX06517G	U1579

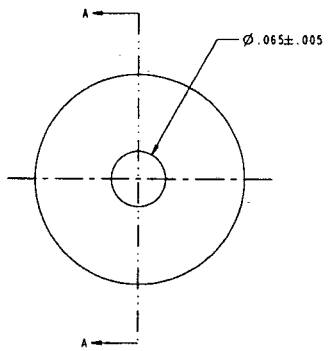

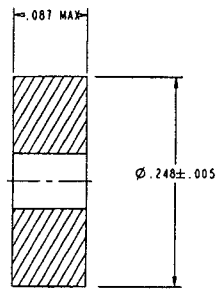

SECTION A-A

SOURCE CONTROL DRAWING

NEXT ASSY	USED ON	
APPLICATION		

UNLESS OTHERWISE SPECIFIED DIMENSIONS ARE IN INCHES
GENERAL TOLERANCES
XX DECIMALS ± —
XXX DECIMALS ± —
ANGLES ± —
MATERIAL: —
DO NOT SCALE DRAWING

INDIAN HEAD DIVISION
NAVAL SURFACE WARFARE CENTER
INDIAN HEAD, MD 20640-5035

ENGINEER		
ENGINEER	SKETCH APPROVED	
CHECKED	MAY 25, 2006	
DRAWN		
APPROVED FOR NSWCIH		DATE

DEPARTMENT OF THE NAVY
NAVAL SURFACE WARFARE CENTER
INDIAN HEAD, MD 20640-5035

CAPACITOR

SIZE	CAGE CODE	DRAWING NUMBER
D	14083	SK06040-E216M-10
SCALE: NONE		SHEET 1 OF 1

NOTES:

1. INTERPRET DRAWING IN ACCORDANCE WITH ASME Y14.5M-1994 AND ASME Y14.100-2004 WITH APPENDICES B, C, D, AND E.

(M101) 2. MATERIAL: NICKEL 29%, COBALT 17%, IRON REMAINDER, PER ASTM F 15-04.
DIAMETER: .0063 INCHES (34 AWG)
RESISTANCE: 294 OHMS PER CIRCULAR MIL FOOT.

SUGGESTED MATERIAL: KOVAR
SUGGESTED SOURCE: CALIFORNIA FINE WIRE COMPANY
P.O. BOX 446, GROVER BEACH,
CALIFORNIA 93483-0446

3. ADVISORY: APPROXIMATELY 1.75 INCHES OF WIRE LENGTH IS NEEDED FOR EACH CARTRIDGE. THE ACTUAL LENGTH IS DETERMINED BY RESISTANCE CHECKS, ON NEXT HIGHER ASSEMBLY.

CLASSIFICATION OF CHARACTERISTICS (DOD-STD-2101)	
CRITICAL-	NONE
MAJOR-	1
MINOR-	ALL OTHER CHARACTERISTICS

REVISIONS			
REV	DESCRIPTION	DATE	APPROVAL

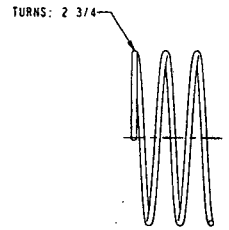

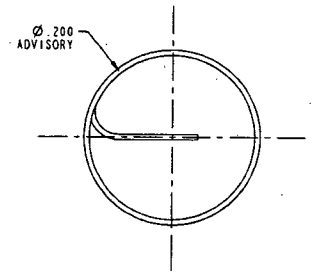

NEXT ASSY	USED ON
APPLICATION	

UNLESS OTHERWISE SPECIFIED DIMENSIONS ARE IN INCHES
GENERAL TOLERANCES
XX DECIMALS ± —
XXX DECIMALS ± —
ANGLES ± —
MATERIAL:
DO NOT SCALE DRAWING

INDIAN HEAD DIVISION
NAVAL SURFACE WARFARE CENTER
INDIAN HEAD, MD 20640-5035

ENGINEER		
ENGINEER	SKETCH APPROVED	
CHECKED	MAY 25, 2006	
DRAWN		
APPROVED FOR NSWCIH		DATE

DEPARTMENT OF THE NAVY
NAVAL SURFACE WARFARE CENTER
INDIAN HEAD, MD 20640-5035

BRIDGEWIRE

SIZE	CAGE CODE	DRAWING NUMBER
D	14083	SK06040-E216M-9
SCALE: NONE		SHEET 1 OF 1

NOTES:

1. INTERPRET DRAWING IN ACCORDANCE WITH ASME Y14.5M-1994 AND ASME Y14.100-2004 WITH APPENDICES B, C, D, AND E.
2. UNLESS OTHERWISE SPCIFIED:
   REMOVE ALL BURRS AND BREAK SHARP EDGES R.020 MAX.
   FILLETS R.010 MAX.
   SURFACE TEXTURE 125.
   ALL DIAMETERS SHALL BE ⌖ .002 A
3. PASSIVATE IN ACCORDANCE WITH ASTM A967.

CLASSIFICATION OF CHARACTERISTICS (DOD-STD-2101)	
CRITICAL-	NONE
MAJOR-	NONE
MINOR-	ALL CHARACTERISTICS

REVISIONS			
REV	DESCRIPTION	DATE	APPROVAL

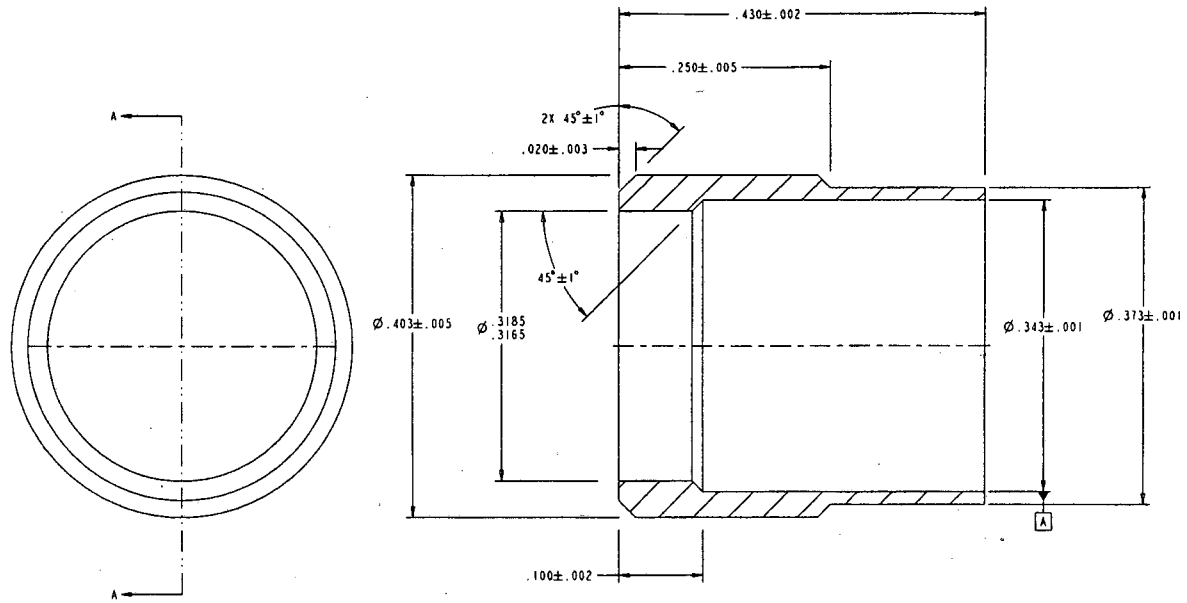

SECTION A-A

NEXT ASSY	USED ON
APPLICATION	

UNLESS OTHERWISE SPECIFIED DIMENSIONS ARE IN INCHES
GENERAL TOLERANCES
XX DECIMALS ± —
XXX DECIMALS ± 0.005
ANGLES ± 1.0°

MATERIAL:
304 L CONDITION A
PER ASTM A276 OR
SAE AMS-QQ-S-763

DO NOT SCALE DRAWING

INDIAN HEAD DIVISION
NAVAL SURFACE WARFARE CENTER
INDIAN HEAD, MD 20640-5035

ENGINEER		
ENGINEER	SKETCH APPROVED	
CHECKED	MAY 25, 2006	
DRAWN		
APPROVED FOR NSWC		DATE

DEPARTMENT OF THE NAVY
NAVAL SURFACE WARFARE CENTER
INDIAN HEAD, MD 20640-5035

SLEEVE

SIZE	CAGE CODE	DRAWING NUMBER
D	14083	SK06040-E216M-11
SCALE: NONE		SHEET 1 OF 1

NOTES:

1. INTERPRET DRAWING IN ACCORDANCE WITH ASME Y14.5M-1994 AND ASME Y14.100-2004 WITH APPENDICES B, C, D, AND E.
2. UNLESS OTHERWISE SPCIFIED: REMOVE ALL BURRS AND BREAK SHARP EDGES R.010 MAX. SURFACE TEXTURE 125.
(M101) 3. HEAT TREAT PER ASM-H-6875 TO ROCKWELL C50-53.
4. AFTER HEAT TREATING AND FINISH MACHINING, CLEAN AND PASSIVATE IN ACCORDANCE WITH AMS-QQ-P-35, TYPE II.

CLASSIFICATION OF CHARACTERISTICS (DOD-STD-2101)	
CRITICAL-	NONE
MAJOR-	1
MINOR-	ALL OTHER CHARACTERISTICS

REVISIONS			
REV	DESCRIPTION	DATE	APPROVAL

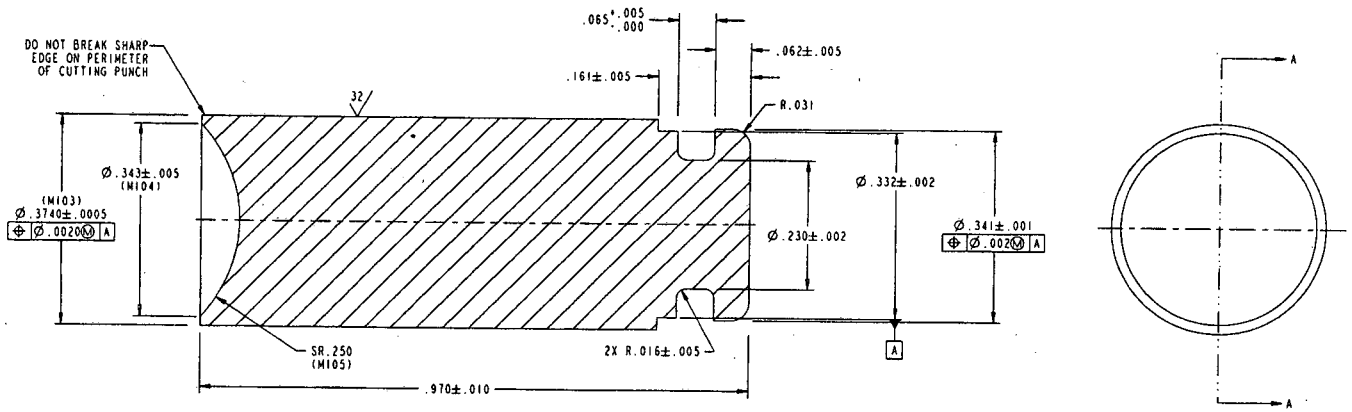

SECTION A-A

UNLESS OTHERWISE SPECIFIED DIMENSIONS ARE IN INCHES GENERAL TOLERANCES XX DECIMALS ± — XXX DECIMALS ± 0.010 ANGLES ± —	INDIAN HEAD DIVISION NAVAL SURFACE WARFARE CENTER INDIAN HEAD, MD 20640-5035		DEPARTMENT OF THE NAVY NAVAL SURFACE WARFARE CENTER INDIAN HEAD, MD 20640-5035	
MATERIAL: (M102) TYPE 420 CORROSION RESIST. STEEL SAE AMS-QQ-S-763	ENGINEER		CUTTING PUNCH	
	ENGINEER	SKETCH APPROVED		
	CHECKED	MAY 25, 2006		
	DRAWN			
NEXT ASSY / USED ON	APPROVED FOR NSWC IH	DATE	SIZE D / CAGE CODE 14083	DRAWING NUMBER SK06040-E216M-8
APPLICATION	DO NOT SCALE DRAWING		SCALE: NONE	SHEET 1 OF 1

CLASSIFICATION OF CHARACTERISTICS (DOD-STD-2101)
CRITICAL - NONE
MAJOR - NONE
MINOR - ALL CHARACTERISTICS

REVISIONS			
REV	DESCRIPTION	DATE	APPROVED
A	SEE ECP 995220E039	99/10/20	RVNJK

NOTES:

1. INTERPRET DRAWING IN ACCORDANCE WITH MIL-STD-100.

2. REQUIREMENTS:

2.1 PROPELLANT COMPOSITION: THE PROPELLANT COMPOSITION, EXCEPT FOR THE GRAPHITE GLAZE, MOISTURE AND VOLATILES AND DUST AND FOREIGN MATTER, SHALL BE AS FOLLOWS:

INGREDIENTS	SPECIFICATIONS	PERCENT BY WEIGHT
NITROCELLULOSE	MIL-DTL-244 (GRADE C, TYPE II)	REMAINDER
NITROGLYCERIN	MIL-N-246	39.0 ± 2.0
ETHYL CENTRALITE	MIL-E-255	1.00 ± 0.50

2.1.1 GRAPHITE GLAZE: THE GRAPHITE GLAZE IN ACCORDANCE WITH MIL-G-155 SHALL BE A NOMINAL OF 0.40% WHEN DETERMINED IN ACCORDANCE WITH MIL-STD-286, METHOD 309.1.2.

2.1.2 MOISTURE AND VOLATILES: THE MOISTURE AND VOLATILES CONTENT OF THE PROPELLANT SHALL BE A MAXIMUM OF 1.00% WHEN DETERMINED IN ACCORDANCE WITH MIL-STD-286, METHOD 101.2.2.

2.1.3 DUST AND FOREIGN MATTER: THE DUST AND FOREIGN MATERIAL CONTENT OF THE PROPELLANT SHALL BE A MAXIMUM OF 0.10% WHEN DETERMINED IN ACCORDANCE WITH MIL-STD-286, METHOD 501.1.3.

2.2 GRAIN DIMENSIONS: THE AVERAGE DIAMETER AND LENGTH SHALL BE 0.053±0.008 AND 0.007±0.002 INCHES, RESPECTIVELY, WHEN DETERMINED IN ACCORDANCE WITH MIL-STD-286, METHOD T504.5.

2.3 120°C HEAT TEST: THE PROPELLANT SHALL NOT CAUSE COMPLETE FADING OF METHYL VIOLET PAPER TO A SALMON PINK COLOR IN LESS THAN 40 MINUTES WHEN EXPOSED TO HEAT TEMPERATURES OF NOT LESS THAN 120°C. TEST SHALL BE CONDUCTED IN ACCORDANCE WITH MIL-STD-286, METHOD 404.1.2.

2.4 RELATIVE QUICKNESS AND RELATIVE FORCE: A PROPELLANT SAMPLE SHALL BE SUBJECTED TO THE CLOSED BOMB TEST IN ACCORDANCE WITH MIL-STD-286, METHOD 801.1.2 OR 804.1, WITH A LOADING DENSITY OF 0.2 GRAMS PER CUBIC CENTIMETER (GM/CC) IN A 200CC VESSEL. RELATIVE QUICKNESS VALUES SHALL BE DETERMINED BY FIRING AGAINST A KNOWN STANDARD. STANDARDS WILL BE ADOPTED, ESTABLISHED, MAINTAINED, AND EVALUATED BY THE PROCESSING FACILITY WITH CONCURRENCE OF THE DIRECT PURCHASING AGENT. THESE RESULTS ARE FOR INFORMATION ONLY.

2.5 A PROPELLANT LOT SHALL CONSIST OF PROPELLANT GRAINS EXTRUDED AND CUT FROM A SINGLE BATCH OF HOMOGENEOUS MIX. MAXIMUM LOT SIZE SHALL BE 400 POUNDS TO ENSURE A HOMOGENEOUS LOT. EACH PROPELLANT LOT SHALL BE ASSIGNED A LOT NUMBER IN ACCORDANCE WITH MIL-STD-1168.

2.6 TEST FAILURE: A PROPELLANT LOT WHICH FAILS TO MEET THE REQUIREMENTS OF THE 120°C HEAT TEST SHALL BE REJECTED.

2.7 A CERTIFICATION SHEET FURNISHING THE PROPELLANT TYPE, QUANTITY, LOT NUMBER, CHEMICAL ANALYSES, TEST RESULTS AND GEOMETRY SHALL ACCOMPANY THE PROPELLANT SHIPMENT.

3. PROPELLANT HAZARD INFORMATION

DOD HAZARD CLASSIFICATION..... 1.3
DOD STORAGE COMPATIBILITY GROUP.. C
DOT HAZARD CLASSIFICATION..... B
DOT CONTAINER MARKING..... PROPELLANT EXPLOSIVE (SOLID), CLASS B

ONLY THE ITEM(S) DESCRIBED ON THIS DRAWING WHEN PROCURED FROM THE VENDOR(S) LISTED HEREON IS APPROVED BY THE NAVAL ORDNANCE STATION, INDIAN HEAD, MD, FOR THE APPLICATION SPECIFIED HEREON. A SUBSTITUTE ITEM SHALL NOT BE USED WITHOUT PRIOR TESTING AND APPROVAL BY THE NAVAL ORDNANCE STATION, INDIAN HEAD, MD.

APPROVED SOURCE(S) OF SUPPLY		
VENDOR	VENDOR'S ITEM IDENT. NO.	APPLICATION
HERCULES, INC. WILMINGTON, DELAWARE CODE IDENT 28284	HPC-23N	CARTRIDGE ACTUATED DEVICES

SOURCE CONTROL DRAWING

FIND NO	QTY REQD	CODE IDENT	PART NO. OR IDENTIFYING NO	SPECIFICATION NO.	NOMENCLATURE OR DESCRIPTION	MATERIAL OR NOTE

PARTS LIST

NEXT ASSY.	USED ON
APPLICATION	

UNLESS OTHERWISE SPECIFIED DIMENSIONS ARE IN INCHES.
TOLERANCE: ANGLES± ——
FRACTIONS± ——
2 PLACE DECIMALS± ——
3 PLACE DECIMALS± ——
MATERIAL: ——

NAVAL ORDNANCE STATION INDIAN HEAD, MD 20640

APPROVALS	DATE
PREP:	
CHK:	
ENGR:	
APPROVED FOR NAVAIR	

AUTHENTICATED 7/16/50

DEPARTMENT OF THE NAVY
NAVAL AIR SYSTEMS COMMAND
WASHINGTON, D.C. 20361

PROPELLANT, DOUBLE BASE

SIZE	CODE IDENT NO.	NAVAIR DRAWING NO.
D	30003	838AS207

SCALE: NONE SHEET 1 OF 1

CLASSIFICATION OF CHARACTERISTICS (DOD-STD-2101)	
CRITICAL-	NONE
MAJOR-	NONE
MINOR-	ALL CHARACTERISTICS

REVISIONS			
REV	DESCRIPTION	DATE	APPROVAL
G	REPLACES REV F WITH CHANGE SEE ECP 9552200061 AND 9552200007	17 JUN 96	RAY WALDEN
H	SEE ECP 01030-5130M	12/4/01	J.L. GOODWIN
J	REDRAWN WITH CHANGE, SEE ECP 04019-5130M	11/9/04	[illegible]

CAD MAINTAINED, CHANGES SHALL BE INCORPORATED BY THE DESIGN ACTIVITY

NOTES:

1. INTERPRET DRAWING IN ACCORDANCE WITH ASME Y14.100-2000 WITH APPENDICES B, C, D, AND E.
2. THIS RESIN SHALL BE A TWO PART SYSTEM, HAVING A MIXING RATIO BY WEIGHT OF ONE TO ONE AND A SPECIFIC GRAVITY OF 1.08.
3. THIS RESIN SHALL HAVE AN INITIAL VISCOSITY OF 7000 CPS AND A GEL TIME OF APPROXIMATELY 30 MINUTES AT 60°C (140°F).
4. CURING TIME WILL VARY FROM 24 TO 48 HOURS AT AMBIENT TEMPERATURES TO A MINIMUM OF 1 HOUR AT 95°C (203°F).
5. FOR EASE OF VERIFICATION OF COMPLETE SEALING, ADD 1 ± .5 PARTS COLOR CONCENTRATE BY WEIGHT TO 10 PARTS OF RESIN BY WEIGHT TO GIVE A VISIBLE RED COLOR TO THE RESIN BEFORE USE IN INTENDED APPLICATION. CONAP DS-1831A (RED), (CYTEC INDUSTRIES, INC., 1405 BUFFALO ST, OLEAN, NY, PHONE 716-372-9650) IS A SUITABLE PRODUCT.
6. ONLY ITEMS DESCRIBED ON THIS DRAWING ARE APPROVED FOR USE IN THE APPLICATIONS SPECIFIED HEREON. A SUBSTITUTE ITEM SHALL NOT BE USED WITHOUT PRIOR APPROVAL BY THE QUALIFYING ACTIVITY.
7. IDENTIFICATION OF THE APPROVED SOURCE(S) OF SUPPLY HEREON IS NOT TO BE CONSTRUED AS A GUARANTEE OF PRESENT OR CONTINUED AVAILABILITY AS A SOURCE OF SUPPLY FOR THE ITEM DESCRIBED ON THE DRAWING.

APPROVED SOURCE(S) OF SUPPLY			
CAGE CODE	VENDOR	VENDOR'S ITEM IDENT NO.	APPLICATION
75037	3M CO. ELECTRICAL PRODUCTS DIVISION OEM 3M AUSTIN CTR AUSTIN, TX 78769-2963 PHONE: 800-676-8381	SCOTCHCAST BRAND ELECTRICAL RESIN NO. 8 (5236)	AIRCREW ESCAPE PROPULSION SYSTEMS CARTRIDGES AND CARTRIDGE ACTUATED DEVICES

DISTRIBUTION STATEMENT C: Distribution authorized to U.S. Government agencies and their contractors administrative or operational use, 7-1-93. Other requests for this document shall be referred to Commander, Indian Head Division, Naval Surface Warfare Center, Indian Head, MD 20640-5035.

SOURCE CONTROL DRAWING

NEXT ASSY	USED ON
APPLICATION	

UNLESS OTHERWISE SPECIFIED DIMENSIONS ARE IN INCHES
GENERAL TOLERANCES
XX DECIMALS ± —
XXX DECIMALS ± —
ANGLES ± —
MATERIAL: —
DO NOT SCALE DRAWING

INDIAN HEAD DIVISION
NAVAL SURFACE WARFARE CENTER
INDIAN HEAD, MD 20640-5035

ENGINEER
ENGINEER
CHECKED
DRAWN
APPROVED FOR NAVAIR — DATE

AUTHENTICATED 8/15/73

DEPARTMENT OF THE NAVY
NAVAL AIR SYSTEMS COMMAND
PATUXENT RIVER, MD 20670-1628

RESIN, EPOXY

SIZE	CAGE CODE	DRAWING NUMBER
D	30003	707AS114

SCALE: NONE — SHEET 1 OF 1

CLASSIFICATION OF CHARACTERISTICS (DOD-STD-2101)	
CRITICAL-	NONE
MAJOR-	NONE
MINOR-	ALL CHARACTERISTICS

REVISIONS

REV	DESCRIPTION	DATE	APPROVAL
B	REDRAWN WITH CHANGE SEE ECP 0352201020	20030422	

CAD MAINTAINED. CHANGES SHALL BE INCORPORATED BY THE DESIGN ACTIVITY.

NOTES:

1. INTERPRET DRAWING IN ACCORDANCE WITH ASME Y14.100-2000, APPENDIX B-E.
2. LUBRICANT SHALL BE MEDIUM CONSISTENCY.

ONLY ITEMS DESCRIBED ON THIS DRAWING ARE APPROVED FOR USE IN THE APPLICATIONS SPECIFIED HEREON. A SUBSTITUTE ITEM SHALL NOT BE USED WITHOUT PRIOR APPROVAL BY THE QUALIFYING ACTIVITY.

IDENTIFICATION OF THE APPROVED SOURCE(S) OF SUPPLY HEREON IS NOT TO BE CONSTRUED AS A GUARANTEE OF PRESENT OR CONTINUED AVAILABILITY AS A SOURCE OF SUPPLY FOR THE ITEM DESCRIBED ON THE DRAWING.

APPROVED SOURCE(S) OF SUPPLY		
VENDOR		
NAME AND ADDRESS	CAGE CODE	PART NUMBER
DOW CORNING CORP. MIDLAND, MICHIGAN 48640	5D028	33

SOURCE CONTROL DRAWING

DISTRIBUTION STATEMENT C:
DISTRIBUTION AUTHORIZED TO U.S. GOVERNMENT AGENCIES AND THEIR CONTRACTORS, ADMINISTRATIVE OR OPERATIONAL USE, 7-1-93. OTHER REQUESTS FOR THIS DOCUMENT SHALL BE REFERRED TO COMMANDER, INDIAN HEAD DIVISION, NAVAL SURFACE WARFARE CENTER, 101 STRAUSS AVENUE INDIAN HEAD, MD. 20640-5035.

NEXT ASSY	USED ON
834AS105	JAU-13/A
834AS104	JAU-14/A
834AS104	JAU-13/A

APPLICATION

UNLESS OTHERWISE SPECIFIED DIMENSIONS ARE IN INCHES
GENERAL TOLERANCES
XX DECIMALS ± —
XXX DECIMALS ± —
ANGLES ± —
MATERIAL: ———
DO NOT SCALE DRAWING

INDIAN HEAD DIVISION
NAVAL SURFACE WARFARE CENTER
INDIAN HEAD, MD 20640-5035

ENGINEER
ENGINEER
CHECKED
DRAWN
APPROVED FOR NAVSEA
DATE 1-7-16
AUTHENTICATED 1/7/16

DEPARTMENT OF THE NAVY
NAVAL AIR SYSTEMS COMMAND
WASHINGTON, D.C. 20360

LUBRICANT, O-RING

SIZE	CAGE CODE	DRAWING NUMBER
D	30003	834AS129

SCALE: NONE | WEIGHT: --- | SHEET 1 OF 1

MARK THUS:
U.S.N. INSP.
GAGE DR. 929845 (1)
SER. NO.
COMP. NO. DR.2022774
CONC. ~~.382~~ .383 AND .374 DIAS.

MARK LATEST GAGE REVISION LETTER

REVISIONS				
ZONE	LTR.	DESCRIPTION	DATE	APPROVAL
	A4		9-4-63	
	B	SEE REV. NOTICE	11-17-70	
		SUPERSEDED	11/26/80	

COMPONENT	
DRAWING	PC.
2022774	

GAGE APPEARS ON GAGE LISTS

L.D. NUMBERS
586999

SPECIAL

B M L 23 0

929845

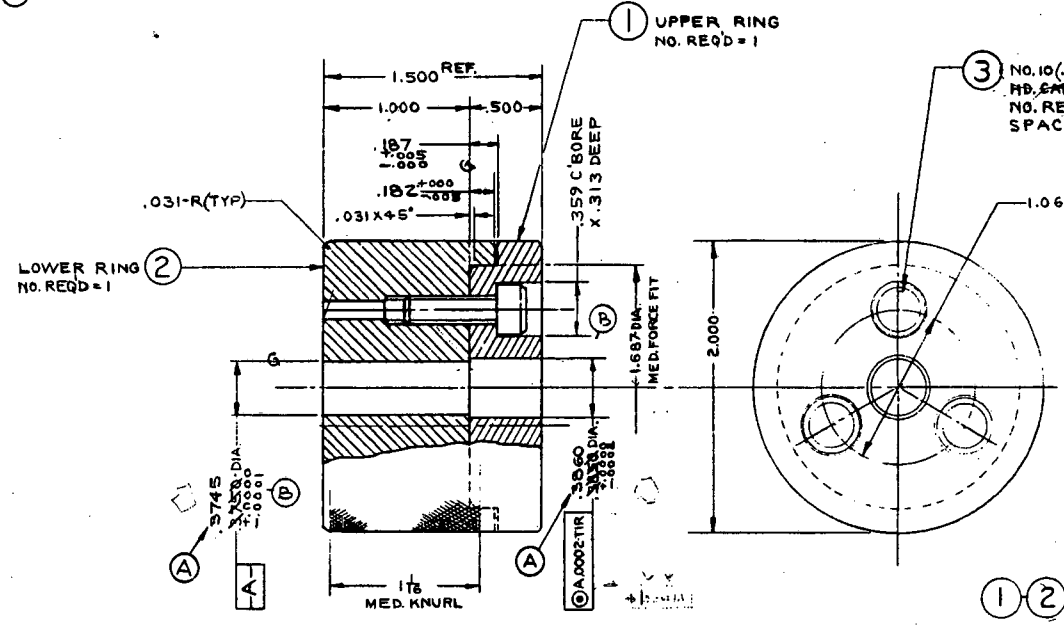

1 2 — MATL: — TOOL STEEL, HARDEN TO ROCKWELL "C" 63-66
SURFACES MARKED "G" TO BE GROUND.
BREAK SHARP EDGES .015 MAX.

SUPERSEDED

REDRAWN W/O CHANGE ON REV C

NOTE:
SURFACES MARKED "G" TO BE ELECTROLIZED, OR EQUIV. PROCESS WHICH MEETS OR EXCEEDS FEDERAL SPEC. QQ-C-320, TYPE I, CLASS 2, .0005 MAX. THICKNESS. DIMS. APPLY AFTER PLATING.
SUGGESTED SOURCE:
ELECTROLIZING SALES, INC.,
1947 HOOPER AVE.,
LOS ANGELES, CA. 90011.

NOTE:
FOR GENERAL SPECIFICATIONS FOR THE MANUFACTURE, PACKAGING AND SHIPPING, SEE MIL-G-10944

SERIAL NO. TO BE FILLED IN BY ACTIVITY INSPECTING GAGE

INTERPRET DIMENSIONS AND TOLERANCES IN ACCORDANCE WITH MIL-STD.-8

UNLESS OTHERWISE SPECIFIED DIMENSIONS ARE IN INCHES TOLERANCES ON FRACTIONS ± 1/16 DECIMALS ± .010, ANGLES ±

DO NOT SCALE THIS DRAWING

MATERIAL: AS NOTED

W.Q.A.O. APPROVAL		DATE
DIV. ENG.		6/14/62
DR. ENG.		6/14/62
CHECKED		6/14/62
DRAWN		
APPROVED FOR DRAWING		1962

GAGES (INSPECTION)
CONC. OF ~~.382~~ .383 & .374 DIAS.
RECEIVER GAGE

SCALE 2/1 | UNIT WT. | CODE IDENT 10001

DEPARTMENT OF THE NAVY BUREAU OF NAVAL WEAPONS
U.S. NAVAL WEAPONS QUALITY ASSURANCE OFFICE
WASHINGTON, D.C.

SUMMER DRAWING NO. 929845

Bull 7/6/62

CLASSIFICATION OF CHARACTERISTICS (DOD-STD-2101)	
CRITICAL-	NONE
MAJOR-	1
MINOR-	ALL OTHER CHARACTERISTICS

REVISIONS			
REV	DESCRIPTION	DATE	APPROVAL

NOTES:

1. INTERPRET DRAWING IN ACCORDANCE WITH ASME Y14.5M-1994 AND ASME Y14.100-2004 WITH APPENDICES B, C, D, AND E.

2. FOR LIST OF DRAWINGS SEE DL.

(M101) 3. BEFORE LOADING, ELECTROCHEMICALLY ETCH MARKINGS FOR LOT NUMBER, SERIAL NUMBER, AND CARTRIDGE IDENTIFICATION NUMBER ONTO CUTTING PUNCH, FIND NO. 2, APPROXIMATELY AS SHOWN IN ACCORDANCE WITH MIL-STD-130. LOT NUMBER SHALL BE IN ACCORDANCE WITH MIL-STD-1168. SERIAL NUMBER MAY BE HAND INKED USING, PERMANENT MARKER, FIND NO. 6, IN ACCORDANCE WITH MIL-STD-130.

(M102) 4. OVEN DRY PROPELLANT, FIND NO. 3, AT 165°F FOR A MINIMUM OF FOUR (4) HOURS PRIOR TO EACH DAY'S LOADING OPERATIONS.

(M103) 5. LOAD 140±5 MILLIGRAMS OF PROPELLANT, FIND NO. 3 INTO CARTRIDGE SUB-ASSEMBLY MACHINED, FIND NO. 1.

(M104) 6. LUBRICATE O-RING, FIND NO. 4 WITH LUBRICANT, FIND NO. 7. INSTALL O-RING ON THE CUTTING PUNCH, FIND NO. 2. REMOVE EXCESS LUBRICANT. INSERT CUTTING CASE AND FILTER ASSEMBLY, FIND NO. 1, AND CRIMP 360°. THE COIL OF THE BRIDGEWIRE SHALL NOT BE DEFORMED DURING ASSEMBLY OF THE CUTTING PUNCH, FIND NO. 2.

(M105) 7. APPLY CONTINUOUS BEAD OF RESIN, EPOXY, FIND NO. 5, 360° AROUND CRIMP FILLING GAP AS SHOWN. REMOVE EXCESS EPOXY. APPLY A CONTINUOUS FILLET OF EPOXY RESIN, FIND NO. 5, TO COMPLETELY COVER THE CAPACITOR ON THE CARTRIDGE SUBASSEMBLY, MACHINED, FIND NO. 1, AS SHOWN. NO EPOXY RESIN SHALL BE ON THE BACK FACE OF THE CARTRIDGE. NO EPOXY RESIN SHALL BE ON THE LENGTH OF THE PIN WHICH EXTENDS ABOVE THE BACK FACE OF THE CARTRDIGE, WITH THE EXCEPTION OF A MINISCUS.

(M106) 8. EACH CARTRIDGE OF THE PRODUCTION LOT SHALL BE ACCEPTED BY A RECEIVER GAGE IN ACCORDANCE WTIH DRAWING 10001-929845 OR A GAGE WITH EQUAL GAGING SURFACE DIMENSIONS. ACCEPTANCE BY THIS GAGE WILL BE SUFFICIENT VERFICATION OF CHARACTERISTIC.

9. FLAT MUST BE TANGENT WITH .407 MAX DIAMETER WITHIN .002. FLAT MUST ALSO BE PARALLEL WITH ANGLES ON PUNCH WITHIN .036. BREAK SHARP EDGES.

(C1) 10. RESISTANCE OF ASSEMBLED CARTRIDGE, PIN TO CASE SHALL BE 1.0±.1 OHMS.

11. ALL REQUIREMENTS OF MIL-DTL-????? APPLY.

12. PACKAGING SHALL BE IN ACCORDANCE WITH DL419688 AND DL419687, EXCEPT THAT ANY REFERENCE TO "MK23 MOD 0" SHALL BE REPLACED BY THE NOMENCLATURE OF THIS CARTRIDGE: "CCU-XXX/B IMPULSE CARTRIDGE".

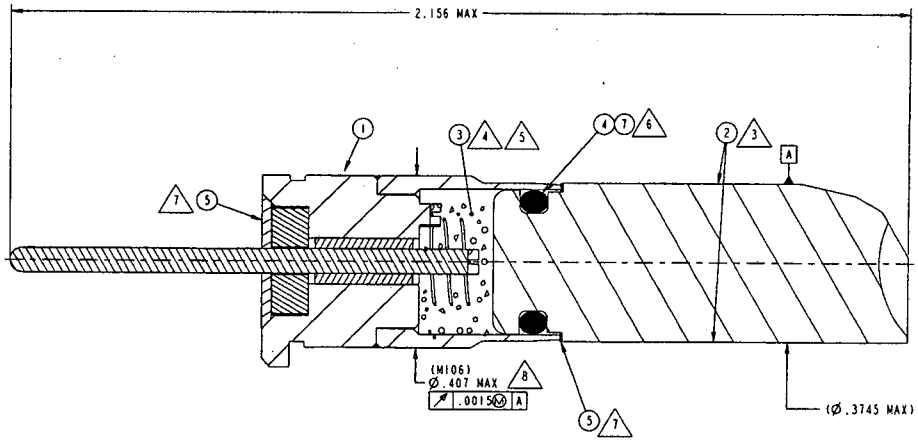

SECTION A-A

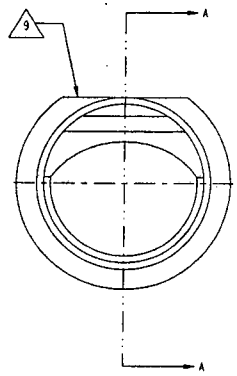

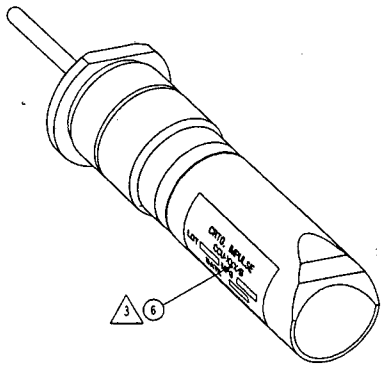

FIND NO	QTY REQ	CAGE CODE	PART OR IDENTIFYING NUMBER	SPECIFICATION NUMBER	NOMENCLATURE OR DESCRIPTION	MATERIAL OR NOTE
7	AR	14083	838AS129		LUBRICANT, O-RING	
6	AR	14083	SAN-13801		PERMANENT MARKER, EXTRA FINE POINT, BLACK INK	SANFORD CORP
5	AR	14083	707AS114		RESIN, EPOXY	7
4	1	14083	NAS 1611-9		PACKING, ETHYLENE PROPYLENE PREFORMED ORING	
3	140 mg	14083	838AS207		PROPELLANT, DOUBLE BASE	
2	1	14083	SK06042-E216M-8		CUTTING PUNCH	
1	1	14083	SK06042-E216M-1		CARTRIDGE CASE SUB-ASSEMBLY, MACHINED	

PARTS LIST

NEXT ASSY	USED ON
APPLICATION	

UNLESS OTHERWISE SPECIFIED DIMENSIONS ARE IN INCHES
GENERAL TOLERANCES
XX DECIMALS ± —
XXX DECIMALS ± —
ANGLES ± —
MATERIAL:
DO NOT SCALE DRAWING

INDIAN HEAD DIVISION
NAVAL SURFACE WARFARE CENTER
INDIAN HEAD, MD 20640-5035

ENGINEER		
ENGINEER	SKETCH APPROVED	
CHECKED	MAY 25, 2006	
DRAWN		
APPROVED FOR RELEASE		DATE

DEPARTMENT OF THE NAVY
NAVAL SURFACE WARFARE CENTER
INDIAN HEAD, MD 20640-5035

MODIFIED M162
CARTRIDGE

SIZE	CAGE CODE	DRAWING NUMBER
D	14083	SK06042-E216M

SCALE: NONE | SHEET 1 OF 1

CLASSIFICATION OF CHARACTERISTICS (DOD-STD-2101)	
CRITICAL-	NONE
MAJOR-	1
MINOR-	ALL OTHER CHARACTERISTICS

REVISIONS			
REV	DESCRIPTION	DATE	APPROVAL

NOTES:

1. INTERPRET DRAWING IN ACCORDANCE WITH ASME 14.5M-1994 AND ASME Y14.100-2004 WITH APPENDICES B, C, D, AND E.
2. MATERIAL: MAKE FROM SK-13, CARTRIDGE CASE SUB-ASSEMBLY, WELDED.
3. (M101) MACHINE OUTSIDE DIAMETER OF CARTRIDGE CASE SUB-ASSEMBLY, WELDED, TO .406±.001 INCHES, TWO PLACES AS SHOWN.

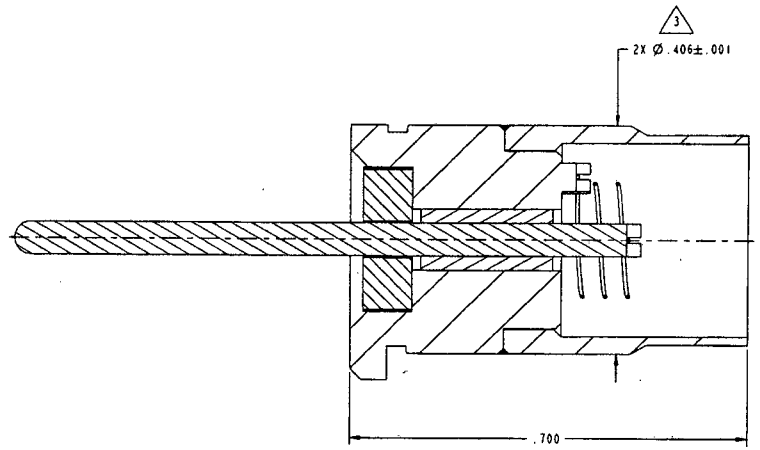

SECTION A-A

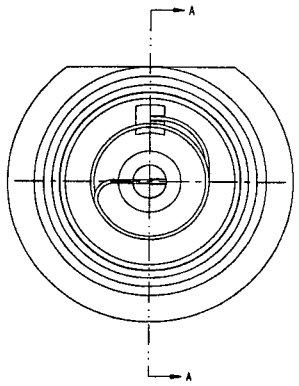

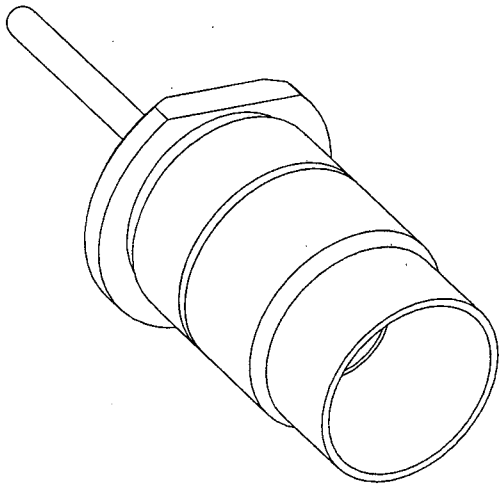

NEXT ASSY	USED ON
APPLICATION	

UNLESS OTHERWISE SPECIFIED DIMENSIONS ARE IN INCHES
GENERAL TOLERANCES
XX DECIMALS ± —
XXX DECIMALS ± —
ANGLES ± —

MATERIAL: 2

DO NOT SCALE DRAWING

INDIAN HEAD DIVISION
NAVAL SURFACE WARFARE CENTER
INDIAN HEAD, MD 20640-5035

ENGINEER		
ENGINEER	SKETCH APPROVED	
CHECKED	MAY 25, 2006	
DRAWN		
APPROVED FOR RSWCIH		DATE

DEPARTMENT OF THE NAVY
NAVAL SURFACE WARFARE CENTER
INDIAN HEAD, MD 20640-5035

CARTRIDGE CASE
SUB-ASSEMBLY, MACHINED

SIZE	CAGE CODE	DRAWING NUMBER
D	14083	SK06042-E216M-1

SCALE: NONE | SHEET 1 OF 1

CLASSIFICATION OF CHARACTERISTICS (DOD-STD-2101)	
CRITICAL-	NONE
MAJOR-	1
MINOR-	ALL OTHER CHARACTERISTICS

REVISIONS			
REV	DESCRIPTION	DATE	APPROVAL

NOTES:

1. INTERPRET DRAWING IN ACCORDANCE WITH ASME 14.5M-1994 AND ASME Y14.100-2004 WITH APPENDICES B, C, D, AND E.

(M101) 2. LASER BEAM WELD CASE AND BRIDGEWIRE ASSEMBLY, FIND NO. 1, TO SLEEVE, FIND NO. 2, FULL 360°.

3. WELD FILLET SHALL NOT EXCEED Ø.404 ON THE OUTSIDE DIAMETER.

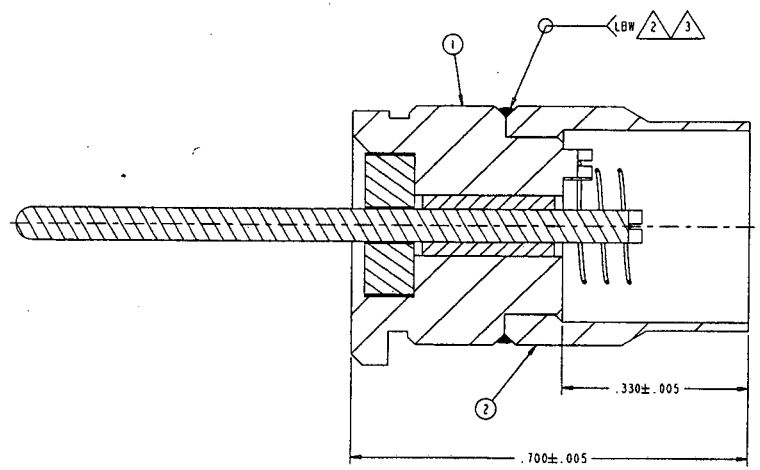

SECTION A-A

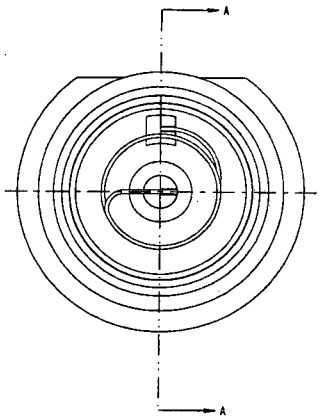

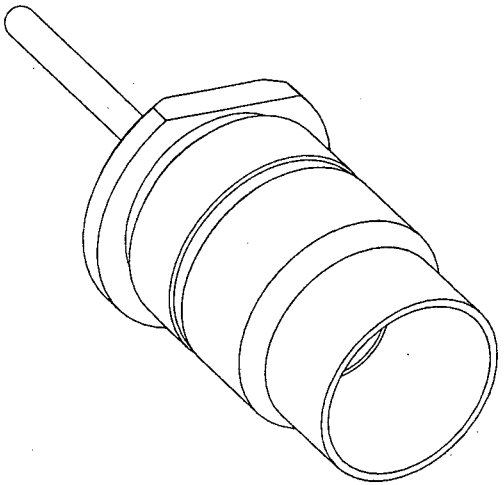

FIND NO	QTY REQ	CAGE CODE	PART OR IDENTIFYING NUMBER	SPECIFICATION NUMBER	NOMENCLATURE OR DESCRIPTION	MATERIAL OR NOTE
2	1	14083	SK06042-E216M-11		SLEEVE	
1	1	14083	SK06042-E216M-3		CASE AND BRIDGEWIRE ASSEMBLY	

PARTS LIST

NEXT ASSY	USED ON
APPLICATION	

UNLESS OTHERWISE SPECIFIED DIMENSIONS ARE IN INCHES
GENERAL TOLERANCES
XX DECIMALS ± —
XXX DECIMALS ± —
ANGLES ± —
MATERIAL:
DO NOT SCALE DRAWING

INDIAN HEAD DIVISION
NAVAL SURFACE WARFARE CENTER
INDIAN HEAD, MD 20640-5035

ENGINEER		
ENGINEER	SKETCH APPROVED	
CHECKED	MAY 25, 2006	
DRAWN		
APPROVED FOR NSWCIH		DATE

DEPARTMENT OF THE NAVY
NAVAL SURFACE WARFARE CENTER
INDIAN HEAD, MD 20640-5035

CARTRIDGE SUB-ASSEMBLY, WELDED

SIZE	CAGE CODE	DRAWING NUMBER
D	14083	SK06042-E216M-2

SCALE: NONE | SHEET 1 OF 1

CLASSIFICATION OF CHARACTERISTICS (DOD-STD-2101)	
CRITICAL-	NONE
MAJOR-	2
MINOR-	ALL OTHER CHARACTERISTICS

REVISIONS			
REV	DESCRIPTION	DATE	APPROVAL

NOTES:

1. INTERPRET DRAWING IN ACCORDANCE WITH ASME Y14.5M-1994 AND ASME Y14.100-2004 WITH APPENDICES B, C, D, AND E.

(M101) 2. THE COILS OF THE BRIDGEWIRE, FIND NO. 2, SHALL NOT TOUCH EACH OTHER.

3. PRIOR TO LASER BEAM WELD, CRIMP FIND NO. 2, TO FIND NO. 1 IN TWO PLACES.

(M102) 4. LASER WELD THE BRIDGEWIRE IN TWO PLACES AS SHOWN.

5. RESISTANCE OF SUBASSEMBLY AFTER LASER BEAM WELDING SHALL BE 1.0 OHMS, PLUS OR MINUS 0.1 OHMS.

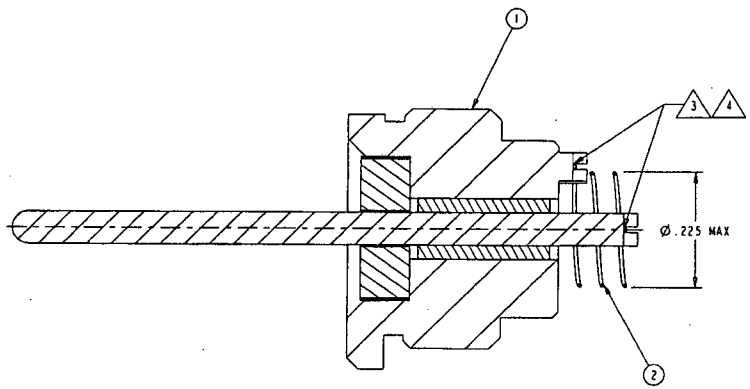

SECTION A-A

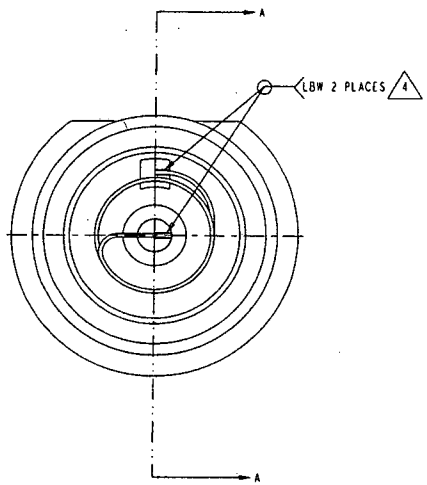

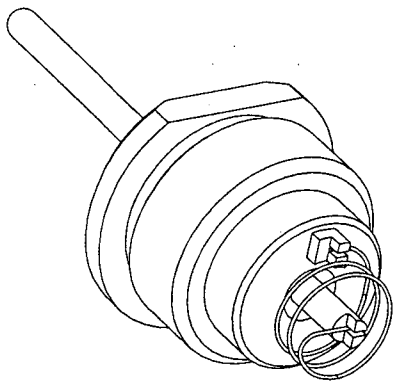

FIND NO	QTY REQ	CAGE CODE	PART OR IDENTIFYING NUMBER	SPECIFICATION NUMBER	NOMENCLATURE OR DESCRIPTION	MATERIAL OR NOTE
2	1	14083	SK06040-E216M-9		BRIDGEWIRE	2
1	1	14083	SK06042-E216M-4		CASE AND FILTER ASSEMBLY	

PARTS LIST

NEXT ASSY	USED ON
APPLICATION	

UNLESS OTHERWISE SPECIFIED DIMENSIONS ARE IN INCHES
GENERAL TOLERANCES
XX DECIMALS ± —
XXX DECIMALS ± —
ANGLES ± —
MATERIAL:
DO NOT SCALE DRAWING

INDIAN HEAD DIVISION
NAVAL SURFACE WARFARE CENTER
INDIAN HEAD, MD 20640-5035

ENGINEER		
ENGINEER	SKETCH APPROVED	
CHECKED	MAY 25, 2006	
DRAWN		
APPROVED FOR NSWCIH		DATE

DEPARTMENT OF THE NAVY
NAVAL SURFACE WARFARE CENTER
INDIAN HEAD, MD 20640-5035

CASE AND BRIDGEWIRE ASSEMBLY

SIZE	CAGE CODE	DRAWING NUMBER
D	14083	SK06042-E216M-3

SCALE: NONE | SHEET 1 OF 1

CLASSIFICATION OF CHARACTERISTICS (DOD-STD-2101)	
CRITICAL-	NONE
MAJOR-	1
MINOR-	ALL OTHER CHARACTERISTICS

REVISIONS			
REV	DESCRIPTION	DATE	APPROVAL

NOTES:

1. INTERPRET DRAWING IN ACCORDANCE WITH ASME Y14.5M-1994 AND ASME Y14.100-2004 WITH APPENDICES B, C, D, AND E.
2. SOLDER CAPACITOR, FIND NO. 2, TO GLASS TO METAL SEAL ASSEMBLY, FIND NO. 1, USING SILVER BEARING SOLDER, FIND NO. 3.

(M101) 3. EVIDENCE OF 360° FILLET OF SOLDER TO CAPACITOR AND GLASS TO METAL SEAL ASSEMBLY IS REQUIRED.

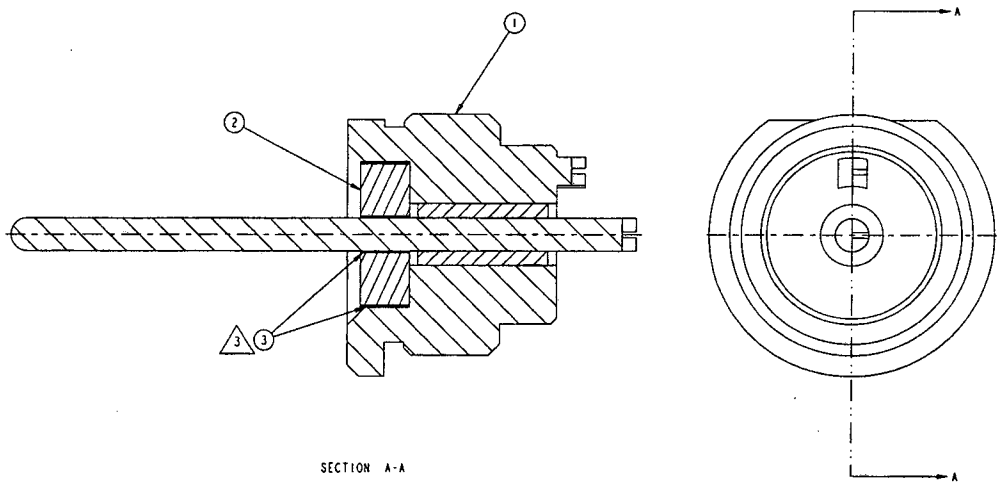

SECTION A-A

FIND NO	QTY REQ	CAGE CODE	PART OR IDENTIFYING NUMBER	SPECIFICATION NUMBER	NOMENCLATURE OR DESCRIPTION	MATERIAL OR NOTE
3	AR	14083	QQ-S-571		SILVER BEARING SOLDER	
2	1	14083	SK06040-E216M-10		CAPACITOR	3
1	1	14083	SK06042-E216M-5		GLASS TO METAL SEAL ASSEMBLY	

PARTS LIST

NEXT ASSY	USED ON
APPLICATION	

UNLESS OTHERWISE SPECIFIED DIMENSIONS ARE IN INCHES
GENERAL TOLERANCES
XX DECIMALS ± —
XXX DECIMALS ± —
ANGLES ± —
MATERIAL:
DO NOT SCALE DRAWING

INDIAN HEAD DIVISION
NAVAL SURFACE WARFARE CENTER
INDIAN HEAD, MD 20640-5035

ENGINEER
ENGINEER
CHECKED
DRAWN
APPROVED FOR RELEASE
DATE

SKETCH APPROVED
MAY 25, 2006

DEPARTMENT OF THE NAVY
NAVAL SURFACE WARFARE CENTER
INDIAN HEAD, MD 20640-5035

CASE AND FILTER ASSEMBLY

SIZE	CAGE CODE	DRAWING NUMBER
D	14083	SK06042-E216M-4

SCALE: NONE | SHEET 1 OF 1

CLASSIFICATION OF CHARACTERISTICS (DOD-STD-2101)	
CRITICAL-	1
MAJOR-	1
MINOR-	ALL OTHER CHARACTERISTICS

REVISIONS			
REV	DESCRIPTION	DATE	APPROVAL

NOTES:

1. INTERPRET DRAWING IN ACCORDANCE WITH ASME 14.5M-1994 AND ASME Y14.100-2004 WITH APPENDICES B, C, D, AND E.

(C1) 2. CASE, FIND NO. 1, AND CONTACT PIN, FIND NO. 2, SHALL BE JOINED IN A GLASS TO METAL BOND USING GLASS INSULATION, FIND NO. 3. EXPOSED GLASS SURFACES OF THE COMPLETED ASSEMBLY SHALL BE FLUSH $^{+.000}_{-.030}$ TO SURFACE "A" AND SURFACE "B".

3. CASE, FIND NO. 1, AND CONTACT PIN, FIND NO. 2, SHALL BE INDEXED SUCH THAT THE SLOTS ON EACH PART ARE PARALLEL.

(M101) 4. BONDED ASSEMBLY SHALL BE CAPABLE OF WITHSTANDING A PRESSURE OF 15,000 PSI ±500 PSI WHEN APPLIED TO SURFACE "A". THERE SHALL BE NO DAMAGE TO GLASS OR PARTS AND NO MOVEMENT BETWEEN PARTS AFTER TESTING.

5. ELECTRICAL RESISTANCE BETWEEN CONTACT PIN, FIND NO. 2, AND CASE, FIND NO. 1, OF BONDED ASSEMBLY SHALL BE 5 MEGAOHMS MINIMUM USING A SUPPLY VOLTAGE OF 100±10 VDC.

6. A COMMERCIAL EQUIVALENT CAN BE USED FOR GLASS INSULATION, FIND NO. 3.

7. DESCALE AND CLEAN THE ASSEMBLY AND CHECK FOR PASSIVE SURFACE USING SAE-AMS-STD-753, METHOD 102.

8. TIN PLATE .0002-.0003 THICK PER ASTM-B-545 OVER A .0001-.0002 THICK COPPER UNDERPLATE PER MIL-C-14550. PLATE ONLY SURFACES BOUND BY EXTRA HEAVY WEIGHT LINE. ALL OTHER SURFACES SHALL BE FREE OF PLATING.

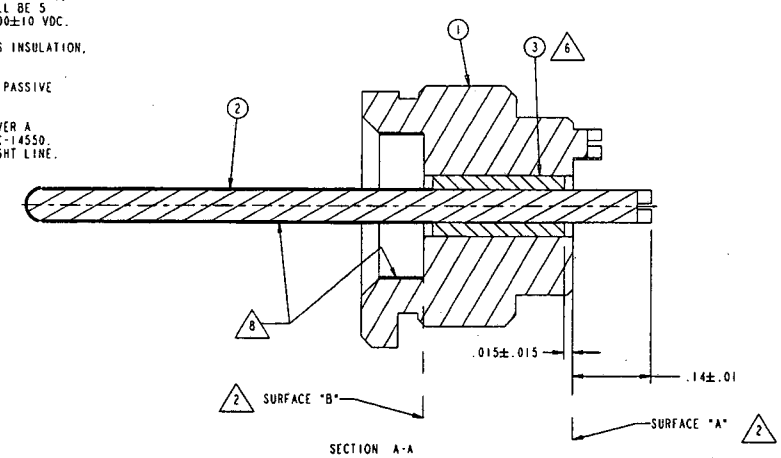

SECTION A-A

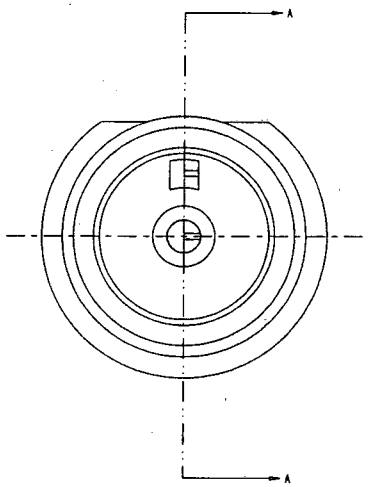

FIND NO	QTY REQ	CAGE CODE	PART OR IDENTIFYING NUMBER	SPECIFICATION NUMBER	NOMENCLATURE OR DESCRIPTION	MATERIAL OR NOTE
3	1	14083	SK3205AS245		INSULATION, GLASS	
2	1	14083	SK06040-E216M-7		PIN, CONTACT	6
1	1	14083	SK06042-E216M-6		CASE	

PARTS LIST

NEXT ASSY	USED ON
APPLICATION	

UNLESS OTHERWISE SPECIFIED DIMENSIONS ARE IN INCHES
GENERAL TOLERANCES
XX DECIMALS ± —
XXX DECIMALS ± —
ANGLES ± —
MATERIAL:
DO NOT SCALE DRAWING

INDIAN HEAD DIVISION
NAVAL SURFACE WARFARE CENTER
INDIAN HEAD, MD 20640-5035

ENGINEER		
ENGINEER	SKETCH APPROVED MAY 25, 2006	
CHECKED		
DRAWN		
APPROVED FOR NSWCIH		DATE

DEPARTMENT OF THE NAVY
NAVAL SURFACE WARFARE CENTER
INDIAN HEAD, MD 20640-5035

GLASS TO METAL SEAL ASSEMBLY

SIZE	CAGE CODE	DRAWING NUMBER
D	14083	SK06042-E216M-5

SCALE: NONE SHEET 1 OF 1

NOTES:

1. INTERPRET DRAWING IN ACCORDANCE WITH ASME 14.5M-1994 AND ASME Y14.100-2004 WITH APPENDICES B, C, D, AND E.
2. UNLESS OTHERWISE SPCIFIED:
   REMOVE ALL BURRS AND BREAK SHARP EDGES R.020 MAX.
   FILLETS R.010 MAX.
   SURFACE TEXTURE 125.

   ALL DIAMETERS ⌀ .005 A.
3. FULL RADIUS PERMITTED IN BOTTOM OF SLOT. MAXIMUM MISMATCH FROM SLOT TO FLAT IS .005. SLOT SHALL NOT UNDERCUT FLAT.

CLASSIFICATION OF CHARACTERISTICS (DOD-STD-2101)	
CRITICAL-	NONE
MAJOR-	1
MINOR-	ALL OTHER CHARACTERISTICS

REVISIONS			
REV	DESCRIPTION	DATE	APPROVAL

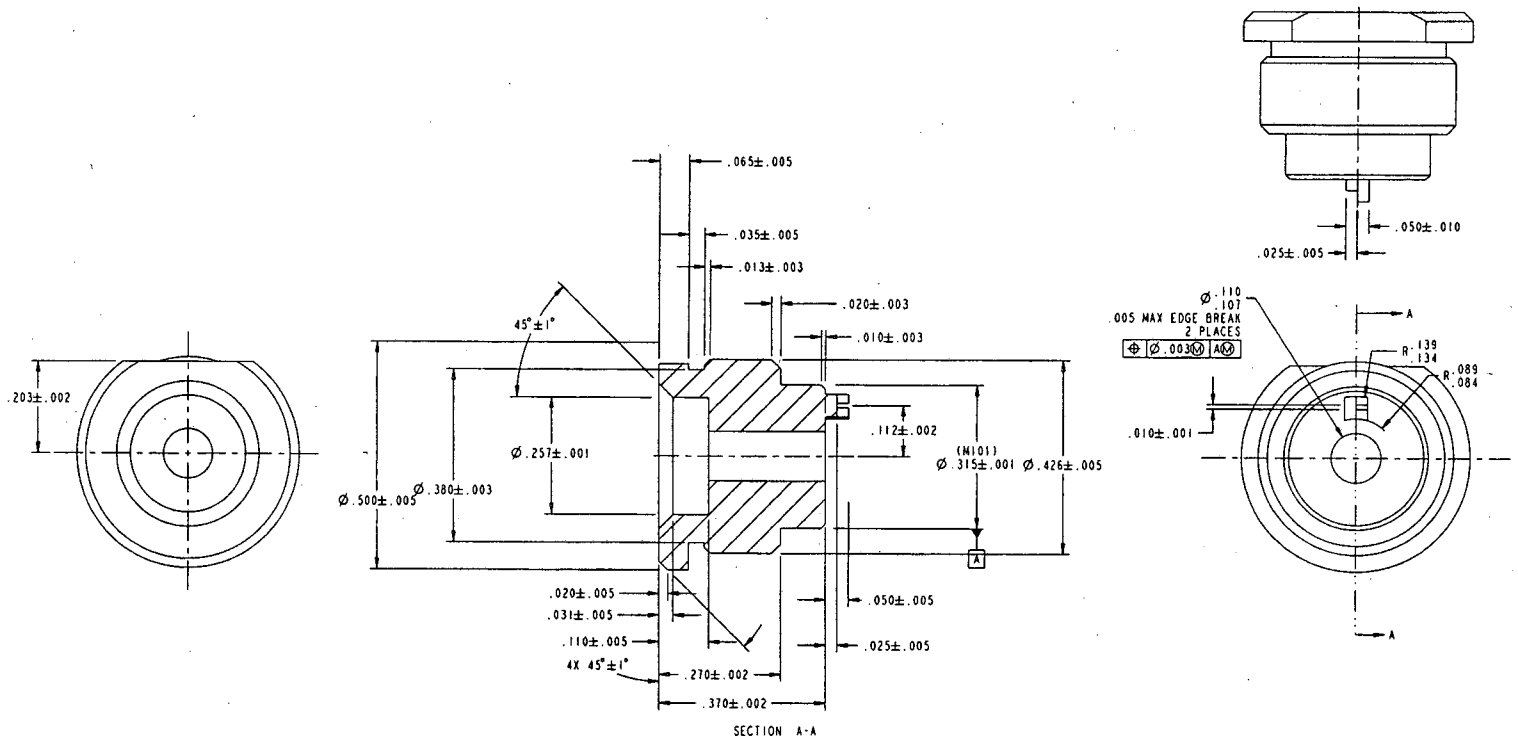

NEXT ASSY	USED ON	
APPLICATION		

UNLESS OTHERWISE SPECIFIED DIMENSIONS ARE IN INCHES
GENERAL TOLERANCES
XX DECIMALS ± —
XXX DECIMALS ± 0.005
ANGLES ± 1.0°

MATERIAL:
CRES TYPE 304 L
CONDITION A
PER ASTM A276 OR
SAE AMS-QQ-S-763

DO NOT SCALE DRAWING

INDIAN HEAD DIVISION
NAVAL SURFACE WARFARE CENTER
INDIAN HEAD, MD 20640-5035

ENGINEER	
ENGINEER	SKETCH APPROVED
CHECKED	MAY 25, 2006
DRAWN	
APPROVED FOR NSWCIH	DATE

DEPARTMENT OF THE NAVY
NAVAL SURFACE WARFARE CENTER
INDIAN HEAD, MD 20640-5035

CASE

SIZE	CAGE CODE	DRAWING NUMBER
D	14083	SK06042-E216M-6

SCALE: NONE | SHEET 1 OF 1

NOTES:

1. INTERPRET DRAWING IN ACCORDANCE WITH ASME Y14.5M-1994 AND ASME Y14.100-2004 WITH APPENDICES B, C, D, AND E.
2. FULL RADIUS PERMITTED IN BOTTOM OF SLOT. MAXIMUM MISMATCH FROM SLOT TO FLAT IS .005. SLOT SHALL NOT UNDERCUT FLAT.
3. UNLESS OTHERWISE SPECIFIED: REMOVE ALL BURRS AND BREAK SHARP EDGES. SURFACE TEXTURE 63 √.

CLASSIFICATION OF CHARACTERISTICS (DOD-STD-2101)	
CRITICAL-	NONE
MAJOR-	3
MINOR-	ALL OTHER CHARACTERISTICS

REVISIONS			
REV	DESCRIPTION	DATE	APPROVAL

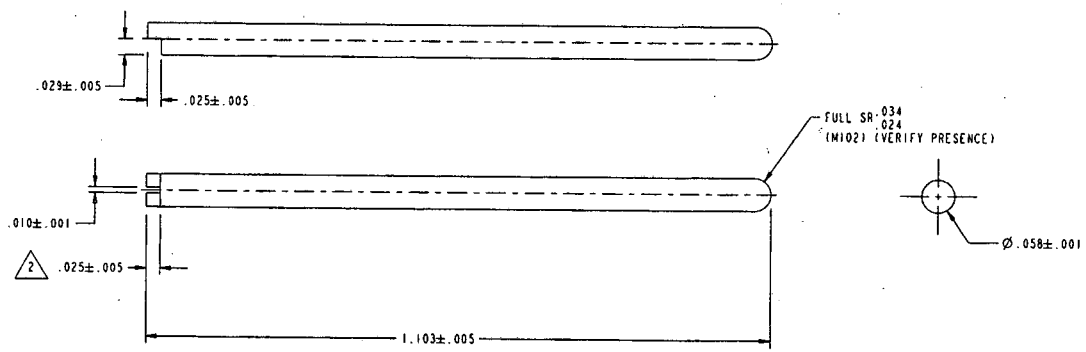

NEXT ASSY	USED ON
APPLICATION	

UNLESS OTHERWISE SPECIFIED DIMENSIONS ARE IN INCHES
GENERAL TOLERANCES
XX DECIMALS ± —
XXX DECIMALS ± 0.005
ANGLES ± —

MATERIAL:
IRON-NICKEL ALLOY
SAE AMS-I-23011, CLASS 2
(M103)

DO NOT SCALE DRAWING

INDIAN HEAD DIVISION
NAVAL SURFACE WARFARE CENTER
INDIAN HEAD, MD 20640-5035

ENGINEER		
ENGINEER	SKETCH APPROVED	
CHECKED	MAY 25, 2006	
DRAWN		
APPROVED FOR NSWCIH		DATE

DEPARTMENT OF THE NAVY
NAVAL SURFACE WARFARE CENTER
INDIAN HEAD, MD 20640-5035

PIN, CONTACT

SIZE	CAGE CODE	DRAWING NUMBER
D	14083	SK06040-E216M-7

SCALE: NONE | SHEET 1 OF 1

CLASSIFICATION OF CHARACTERISTICS (DOD-STD-2101)
CRITICAL- NONE
MAJOR- NONE
MINOR- ALL CHARACTERISTICS

REVISIONS			
REV	DESCRIPTION	DATE	APPROVAL
	SGR SK05078-5230P	2005-10-31	

CAD MAINTAINED. CHANGES SHALL BE INCORPORATED BY THE DESIGN ACTIVITY.

NOTES:

1. INTERPRET DRAWING IN ACCORDANCE WITH ASME Y14.100-2000 WITH APPENDICES B, C, D AND E.

2. GLASS PHYSICAL PROPERTIES:

THERMAL EXPANSION COEFFICIENT 20 - 300°C (10^{-7}/°C)	93
CONTRACTION COEFFICIENT 20°C - ANNEALING POINT (10^{-7}/°C)	104
STRAIN POINT (°C)	450
ANNEALING POINT (°C)	480
Tg (°C)	467
SOFTENING POINT (°C)	677
WORKING POINT (°C)	1035
DENSITY (gm/cc)	2.60
REFRACTIVE INDEX	1.51
DIELECTRIC PROPERTIES @ 1 Mc & 20°C	
P.F. %	.21
DIELECTRIC CONSTANT	8.7
LOSS FACTOR %	1.41

3. THERMAL EXPANSION COEFFICIENT: THE AVERAGE DIMENSIONAL CHANGE PER UNIT OF MEASUREMENT PER °C AS THE TEMPERATURE IS INCREASED OVER THE TEMPERATURE RANGE.

4. CONTRACTION COEFFICIENT: THE AVERAGE DIMENSIONAL CHANGE PER UNIT OF MEASUREMENT PER °C AS THE TEMPERATURE IS DECREASED OVER THE TEMPERATURE RANGE.

5. STRAIN POINT: THE TEMPERATURE CORRESPONDING TO A VISCOSITY OF $10^{14.5}$ POISES, REPRESENTS THE TEMPERATURE AT WHICH INTERNAL STRAINS WILL BE REDUCED TO ACCEPTABLE. VALUES IN FOUR HOURS.

6. ANNEALING POINT: THE TEMPERATURE CORRESPONDING TO A VISCOSITY OF $10^{13.0}$POISES, REPRESENTS THE TEMPERATURE AT WHICH INTERNAL STRAINS WILL BE REDUCED TO ACCEPTABLE VALUES IN 15 MINUTES.

7. Tg TEMPERATURE: THE TEMPERATURE RANGE IN WHICH GLASS GRADUALLY TRANSFORMS FROM A BRITTLE TO A PLASTIC STATE, AND THE STRESS IN THE GLASS MAY BE COMPLETELY RELIEVED WITHIN 30 MINUTES WHEN HEATED 5 TO 15 °C ABOVE THE Tg TEMPERATURE.

8. SOFTENING POINT: THE TEMPERATURE CORRESPONDING TO A VISCOSITY OF $10^{7.6}$ POISES, REPRESENTS THE TEMPERATURE AT WHICH THE SAMPLE WILL DEFORM UNDER STRESS OF ITS OWN WEIGHT.

9. WORKING POINT: THE TEMPERATURE CORRESPONDING TO A VISCOSITY OF 10^4 POISES, AND ARBITRARY VISCOSITY CHOSEN REPRESENTING THE RANGE WHERE MOST WORKING IS USUALLY ACCOMPLISHED.

10. DENSITY: WEIGHT PER UNIT VOLUME AS MEASURED ON AN ANNEALED GLASS SAMPLE AT ROOM TEMPERATURE.

11. REFRACTIVE INDEX: THE RATIO OF THE VELOCITY OF MONOCHROMATIC LIGHT (SODIUM D LINE 589.3 MU), IN ANNEALED GLASS SAMPLES AS COMPARED TO AIR.

12. P.F.%: A MEASURE OF ELECTRICAL ENERGY LOSS IN A MATERIAL WHEN IT IS SUBJECTED TO AN ALTERNATING SINE WAVE VOLTAGE. IT IS EQUAL TO THE COSINE OF THE ANGLE BETWEEN THE ALTERNATING VOLTAGE AND CURRENT.

13. DIELECTRIC CONSTANT: A MEASURE OF THE PROPERTY WHICH DETERMINES THE ELECTROSTATIC ENERGY STORED PER UNIT VOLUME FOR UNIT POTENTIAL GRADIENT. IT IS NUMBERIC AND EXPRESSED AS A RATIO TO THE DIELECTRIC CONSTANT OF A VACUUM.

14. LOSS FACTOR %: A MEASURE OF THE ELECTRICAL ENERGY THAT IS LOST AND CONVERTED INTO HEAT IN A DIELECTRIC SUBJECTED TO A VARYING ELECTRIC FIELD. IT IS THE PRODUCT OF THE POWER FACTOR AND THE DIELECTRIC CONSTANT.

ONLY THE ITEMS DESCRIBED ON THIS DRAWING ARE APPROVED FOR USE IN THE APPLICATION(S) SPECIFIED HEREON. A SUBSTITUTE ITEM SHALL NOT BE USED WITHOUT PRIOR APPROVAL BY THE COGNIZANT DESIGN ACTIVITY.

IDENTIFICATION OF THE APPROVED SOURCE(S) OF SUPPLY HEREON IS NOT TO BE CONSTRUED AS A GUARANTEE OF PRESENT OR CONTINUED AVAILABILITY. AS A SOURCE OF SUPPLY FOR THE ITEM DESCRIBED ON THE DRAWING.

APPROVED SOURCE(S) OF SUPPLY		
VENDOR		
NAME AND ADDRESS	CAGE CODE	PART NUMBER
SCHOTT CORP 3 ODELL PLACE YONKERS, NY 10701-1405	S-8061	S-8061

SOURCE CONTROL DRAWING

DISTRIBUTION STATEMENT C:
DISTRIBUTION AUTHORIZED TO U.S. GOVERNMENT AGENCIES AND THEIR CONTRACTORS. ADMINISTRATIVE OR OPERATIONAL USE, 2005-06-16. OTHER REQUESTS FOR THIS DOCUMENT SHALL BE REFERRED TO COMMANDER, INDIAN HEAD DIVISION, NAVAL SURFACE WARFARE CENTER, 101 STRAUSS AVENUE INDIAN HEAD, MD. 20640-5035.

NEXT ASSY	USED ON
SK3205AS238	SK3205AS235
APPLICATION	

UNLESS OTHERWISE SPECIFIED DIMENSIONS ARE IN INCHES
GENERAL TOLERANCES
XX DECIMALS ±—
XXX DECIMALS ±—
ANGLES ±—
MATERIAL: —
DO NOT SCALE DRAWING

INDIAN HEAD DIVISION
NAVAL SURFACE WARFARE CENTER
INDIAN HEAD, MD 20640-5035

ENGINEER	Dave Dorsey	1/27/06
ENGINEER		
CHECKED		
DRAWN	NSWC IH	2003-06-16
APPROVED FOR NAVAIR	Anne E. Mclaurin	DATE 1/27/06

DEPARTMENT OF THE NAVY
NAVAL AIR SYSTEMS COMMAND
PATUXENT RIVER, MD. 20670-1626

INSULATION, GLASS

SIZE	CAGE CODE	DRAWING NUMBER
D	30003	SK3205AS245

SCALE: NONE | WEIGHT: --- | SHEET 1 OF 1

NOTES:

1. INTERPRET DRAWING IN ACCORDANCE WITH ASME 14.5M-1994 AND ASME Y14.100-2004 WITH APPENDICES B, C, D, AND E.
2. ONLY THE ITEMS DESCRIBED ON THIS DRAWING ARE APPROVED FOR USE IN THE APPLICATION(S) SPECIFIED HEREON. A SUBSTITUTE ITEM SHALL NOT BE USED WITHOUT PRIOR APPROVAL BY THE CONGNIZANT DESIGN ACTIVITY.
3. IDENTIFICATION OF THE APPROVED ITEMS HEREON IS NOT TO BE CONSTRUED AS A GUARANTEE OF PRESENT OR CONTINUED AVAILABILITY.

CLASSIFICATION OF CHARACTERISTICS (DOD-STD-2101)	
CRITICAL-	NONE
MAJOR-	NONE
MINOR-	ALL CHARACTERISTICS

REVISIONS			
REV	DESCRIPTION	DATE	APPROVAL

APPROVED SOURCES OF SUPPLY

NAME AND ADDRESS	PART NUMBER	CAGE CODE
SPECTRUM CONTROL TECHNOLOGY, INC. 4100 MICHOUD BLVD. NEW ORLEANS, LA 70129	248065A5704P6B0	0LR95
SYFER TECHNOLOGY LIMITED OLD STOKE ROAD ARMINGHALL, NORWICH, NORFOLK NR14 8SQ UNITED KINGDOM	2507G0500704PX06517G	U1579

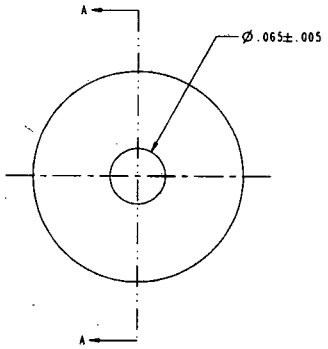

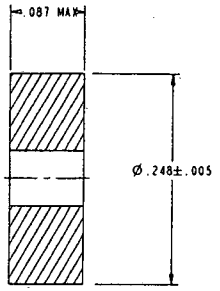

SECTION A-A

SOURCE CONTROL DRAWING

NEXT ASSY	USED ON	UNLESS OTHERWISE SPECIFIED DIMENSIONS ARE IN INCHES GENERAL TOLERANCES XX DECIMALS ± — XXX DECIMALS ± — ANGLES ± —	INDIAN HEAD DIVISION NAVAL SURFACE WARFARE CENTER INDIAN HEAD, MD 20640-5035	DEPARTMENT OF THE NAVY NAVAL SURFACE WARFARE CENTER INDIAN HEAD, MD 20640-5035
APPLICATION		MATERIAL: —	ENGINEER	CAPACITOR
			ENGINEER SKETCH APPROVED	
			CHECKED MAY 25, 2006	
			DRAWN	SIZE D · CAGE CODE 14083 · DRAWING NUMBER SK06040-E216M-10
		DO NOT SCALE DRAWING	APPROVED FOR NSWCIH DATE	SCALE: NONE · SHEET 1 OF 1

NOTES:

1. INTERPRET DRAWING IN ACCORDANCE WITH ASME Y14.5M-1994 AND ASME Y14.100-2004 WITH APPENDICES B, C, D, AND E.

(M101) 2. MATERIAL: NICKEL 29%, COBALT 17%, IRON REMAINDER, PER ASTM F 15-04.
DIAMETER: .0063 INCHES (34 AWG)
RESISTANCE: 294 OHMS PER CIRCULAR MIL FOOT.

SUGGESTED MATERIAL: KOVAR
SUGGESTED SOURCE: CALIFORNIA FINE WIRE COMPANY
P.O. BOX 446, GROVER BEACH,
CALIFORNIA 93483-0446

3. ADVISORY: APPROXIMATELY 1.75 INCHES OF WIRE LENGTH IS NEEDED FOR EACH CARTRIDGE. THE ACTUAL LENGTH IS DETERMINED BY RESISTANCE CHECKS, ON NEXT HIGHER ASSEMBLY.

CLASSIFICATION OF CHARACTERISTICS (DOD-STD-2101)	
CRITICAL-	NONE
MAJOR-	1
MINOR-	ALL OTHER CHARACTERISTICS

REVISIONS			
REV	DESCRIPTION	DATE	APPROVAL

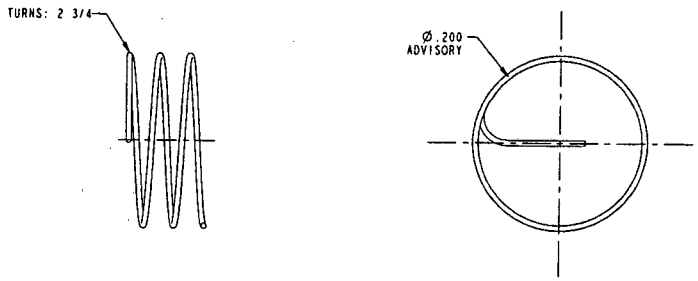

NEXT ASSY	USED ON
APPLICATION	

UNLESS OTHERWISE SPECIFIED DIMENSIONS ARE IN INCHES
GENERAL TOLERANCES
XX DECIMALS ± —
XXX DECIMALS ± —
ANGLES ± —
MATERIAL:
DO NOT SCALE DRAWING

INDIAN HEAD DIVISION
NAVAL SURFACE WARFARE CENTER
INDIAN HEAD, MD 20640-5035

ENGINEER		
ENGINEER	SKETCH APPROVED	
CHECKED	MAY 25, 2008	
DRAWN		
APPROVED FOR NSWC18		DATE

DEPARTMENT OF THE NAVY
NAVAL SURFACE WARFARE CENTER
INDIAN HEAD, MD 20640-5035

BRIDGEWIRE

SIZE	CAGE CODE	DRAWING NUMBER
D	14083	SK06040-E216M-9
SCALE: NONE		SHEET 1 OF 1

NOTES:

1. INTERPRET DRAWING IN ACCORDANCE WITH ASME Y14.5M-1994 AND ASME Y14.100-2004 WITH APPENDICES B, C, D, AND E.
2. UNLESS OTHERWISE SPCIFIED:
   REMOVE ALL BURRS AND BREAK SHARP EDGES R.020 MAX.
   FILLETS R.010 MAX.
   SURFACE TEXTURE 125 ✓.
   ALL DIAMETERS SHALL BE ⌖ .002 A
3. PASSIVATE IN ACCORDANCE WITH ASTM A967.

CLASSIFICATION OF CHARACTERISTICS (DOD-STD-2101)	
CRITICAL-	NONE
MAJOR-	NONE
MINOR-	ALL CHARACTERISTICS

REVISIONS			
REV	DESCRIPTION	DATE	APPROVAL

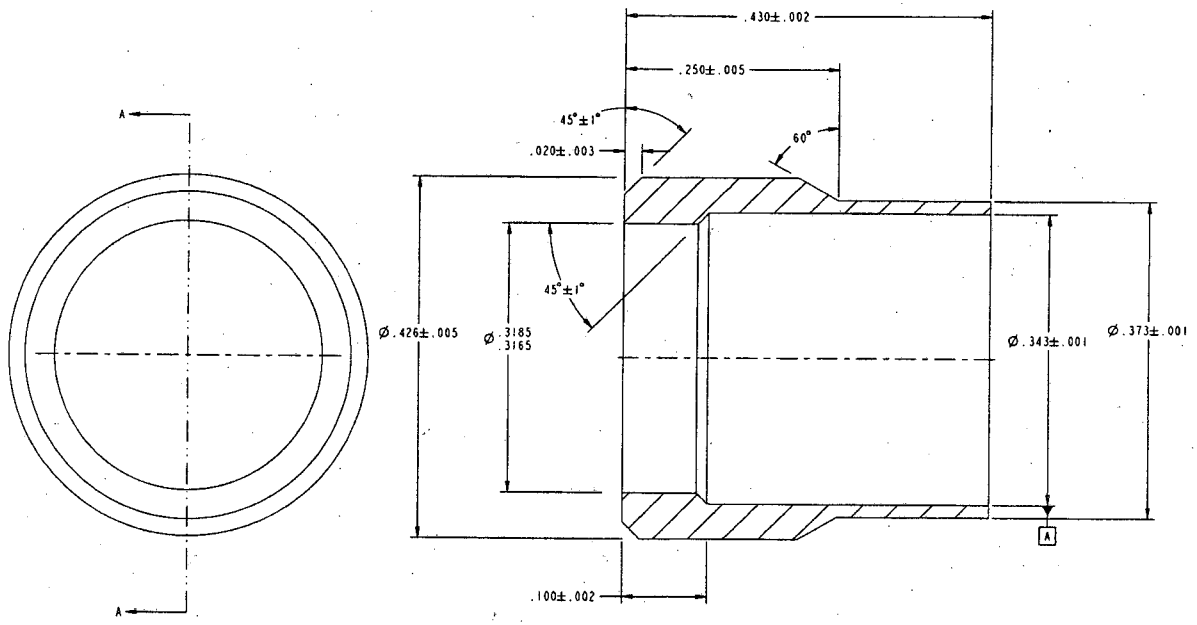

SECTION A-A

UNLESS OTHERWISE SPECIFIED DIMENSIONS ARE IN INCHES GENERAL TOLERANCES XX DECIMALS ± — XXX DECIMALS ± 0.005 ANGLES ± 1.0°	INDIAN HEAD DIVISION NAVAL SURFACE WARFARE CENTER INDIAN HEAD, MD 20640-5035	DEPARTMENT OF THE NAVY NAVAL SURFACE WARFARE CENTER INDIAN HEAD, MD 20640-5035
MATERIAL: 304 L CONDITION A PER ASTM A276 OR SAE AMS-QQ-S-763	ENGINEER ENGINEER SKETCH APPROVED CHECKED MAY 25, 2006 DRAWN APPROVED FOR NSWCIH DATE	SLEEVE
NEXT ASSY / USED ON APPLICATION	DO NOT SCALE DRAWING	SIZE D / CAGE CODE 14083 / DRAWING NUMBER SK06042-E216M-11 SCALE: NONE / SHEET 1 OF 1

NOTES:

1. INTERPRET DRAWING IN ACCORDANCE WITH ASME 14.5M-1994 AND ASME Y14.100-2004 WITH APPENDICES B, C, D, AND E.
2. UNLESS OTHERWISE SPCIFIED: REMOVE ALL BURRS AND BREAK SHARP EDGES R.010 MAX. SURFACE TEXTURE 125/.

(M101) 3. HEAT TREAT PER ASM-H-6875 TO ROCKWELL C50-53.

4. AFTER HEAT TREATING AND FINISH MACHINING, CLEAN AND PASSIVATE IN ACCORDANCE WITH AMS-QQ-P-35, TYPE II.

CLASSIFICATION OF CHARACTERISTICS (DOD-STD-2101)	
CRITICAL-	NONE
MAJOR-	5
MINOR-	ALL OTHER CHARACTERISTICS

REVISIONS			
REV	DESCRIPTION	DATE	APPROVAL

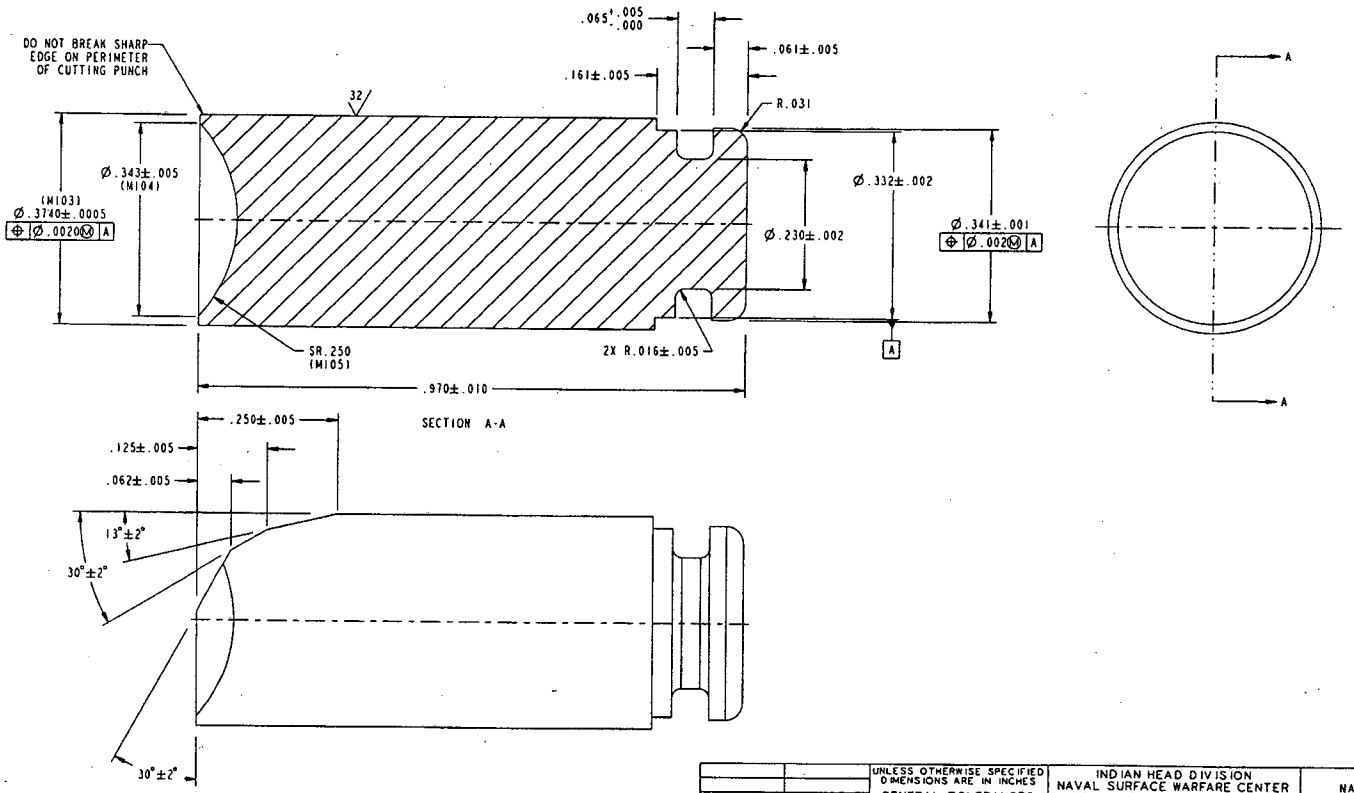

NEXT ASSY	USED ON	UNLESS OTHERWISE SPECIFIED DIMENSIONS ARE IN INCHES GENERAL TOLERANCES XX DECIMALS ± — XXX DECIMALS ± 0.010 ANGLES ± —	INDIAN HEAD DIVISION NAVAL SURFACE WARFARE CENTER INDIAN HEAD, MD 20640-5035
APPLICATION		MATERIAL: (M102) TYPE 420 CORROSION RESIST. STEEL SAE AMS-QQ-S-763	ENGINEER
		DO NOT SCALE DRAWING	ENGINEER SKETCH APPROVED
			CHECKED MAY 25, 2006
			DRAWN
			APPROVED FOR NSWCIH [signature] DATE

DEPARTMENT OF THE NAVY
NAVAL SURFACE WARFARE CENTER
INDIAN HEAD, MD 20640-5035

CUTTING PUNCH

SIZE	CAGE CODE	DRAWING NUMBER
D	14083	SK06042-E216M-8

SCALE: NONE SHEET 1 OF 1

CLASSIFICATION OF CHARACTERISTICS (DOD-STD-2101)
CRITICAL - NONE
MAJOR - NONE
MINOR - ALL CHARACTERISTICS

REVISIONS			
REV	DESCRIPTION	DATE	APPROVED
A	SEE ECP 995220E038	99/10/20	RYW III

NOTES:

1. INTERPRET DRAWING IN ACCORDANCE WITH MIL-STD-100.

2. REQUIREMENTS:

2.1 PROPELLANT COMPOSITION: THE PROPELLANT COMPOSITION, EXCEPT FOR THE GRAPHITE GLAZE, MOISTURE AND VOLATILES AND DUST AND FOREIGN MATTER, SHALL BE AS FOLLOWS:

INGREDIENTS	SPECIFICATIONS	PERCENT BY WEIGHT
NITROCELLULOSE	MIL-DTL-244 (GRADE C, TYPE II)	REMAINDER
NITROGLYCERIN	MIL-N-246	39.0 ± 2.0
ETHYL CENTRALITE	MIL-E-255	1.00 ± 0.50

2.1.1 GRAPHITE GLAZE: THE GRAPHITE GLAZE IN ACCORDANCE WITH MIL-G-155 SHALL BE A NOMINAL OF 0.40% WHEN DETERMINED IN ACCORDANCE WITH MIL-STD-286, METHOD 309.1.2.

2.1.2 MOISTURE AND VOLATILES: THE MOISTURE AND VOLATILES CONTENT OF THE PROPELLANT SHALL BE A MAXIMUM OF 1.00% WHEN DETERMINED IN ACCORDANCE WITH MIL-STD-286, METHOD 101.2.2.

2.1.3 DUST AND FOREIGN MATTER: THE DUST AND FOREIGN MATERIAL CONTENT OF THE PROPELLANT SHALL BE A MAXIMUM OF 0.10% WHEN DETERMINED IN ACCORDANCE WITH MIL-STD-286, METHOD 501.1.3.

2.2 GRAIN DIMENSIONS: THE AVERAGE DIAMETER AND LENGTH SHALL BE 0.053±0.008 AND 0.007±0.002 INCHES, RESPECTIVELY, WHEN DETERMINED IN ACCORDANCE WITH MIL-STD-286, METHOD T504.5.

2.3 120°C HEAT TEST: THE PROPELLANT SHALL NOT CAUSE COMPLETE FADING OF METHYL VIOLET PAPER TO A SALMON PINK COLOR IN LESS THAN 40 MINUTES WHEN EXPOSED TO HEAT TEMPERATURES OF NOT LESS THAN 120°C. TEST SHALL BE CONDUCTED IN ACCORDANCE WITH MIL-STD-286, METHOD 404.1.2.

2.4 RELATIVE QUICKNESS AND RELATIVE FORCE: A PROPELLANT SAMPLE SHALL BE SUBJECTED TO THE CLOSED BOMB TEST IN ACCORDANCE WITH MIL-STD-286, METHOD 801.1.2 OR 804.1, WITH A LOADING DENSITY OF 0.2 GRAMS PER CUBIC CENTIMETER (GM/CC) IN A 200CC VESSEL. RELATIVE QUICKNESS VALUES SHALL BE DETERMINED BY FIRING AGAINST A KNOWN STANDARD. STANDARDS WILL BE ADOPTED, ESTABLISHED, MAINTAINED, AND EVALUATED BY THE PROCESSING FACILITY WITH CONCURRENCE OF THE DIRECT PURCHASING AGENT. THESE RESULTS ARE FOR INFORMATION ONLY.

2.5 A PROPELLANT LOT SHALL CONSIST OF PROPELLANT GRAINS EXTRUDED AND CUT FROM A SINGLE BATCH OF HOMOGENEOUS MIX. MAXIMUM LOT SIZE SHALL BE 400 POUNDS TO ENSURE A HOMOGENEOUS LOT. EACH PROPELLANT LOT SHALL BE ASSIGNED A LOT NUMBER IN ACCORDANCE WITH MIL-STD-1168.

2.6 TEST FAILURE: A PROPELLANT LOT WHICH FAILS TO MEET THE REQUIREMENTS OF THE 120°C HEAT TEST SHALL BE REJECTED.

2.7 A CERTIFICATION SHEET FURNISHING THE PROPELLANT TYPE, QUANTITY, LOT NUMBER, CHEMICAL ANALYSES, TEST RESULTS AND GEOMETRY SHALL ACCOMPANY THE PROPELLANT SHIPMENT.

3. PROPELLANT HAZARD INFORMATION

DOD HAZARD CLASSIFICATION..... 1.3
DOD STORAGE COMPATIBILITY GROUP.. C
DOT HAZARD CLASSIFICATION..... B
DOT CONTAINER MARKING..... PROPELLANT EXPLOSIVE (SOLID), CLASS B

ONLY THE ITEM(S) DESCRIBED ON THIS DRAWING WHEN PROCURED FROM THE VENDOR(S) LISTED HEREON IS APPROVED BY THE NAVAL ORDNANCE STATION, INDIAN HEAD, MD, FOR THE APPLICATION SPECIFIED HEREON. A SUBSTITUTE ITEM SHALL NOT BE USED WITHOUT PRIOR TESTING AND APPROVAL BY THE NAVAL ORDNANCE STATION, INDIAN HEAD, MD.

APPROVED SOURCE(S) OF SUPPLY		
VENDOR	VENDOR'S ITEM IDENT. NO.	APPLICATION
HERCULES, INC. WILMINGTON, DELAWARE CODE IDENT 28284	HPC-23N	CARTRIDGE ACTUATED DEVICES

SOURCE CONTROL DRAWING

FIND NO	QTY REQD	CODE IDENT	PART NO. OR IDENTIFYING NO	SPECIFICATION NO.	NOMENCLATURE OR DESCRIPTION	MATERIAL OR NOTE

PARTS LIST

NEXT ASSY. | USED ON
APPLICATION

UNLESS OTHERWISE SPECIFIED DIMENSIONS ARE IN INCHES.
TOLERANCE: ANGLES ± ——
FRACTIONS ± ——
2 PLACE DECIMALS ± ——
3 PLACE DECIMALS ± ——
MATERIAL: ——

NAVAL ORDNANCE STATION INDIAN HEAD, MD 20640
APPROVALS | DATE
PREP:
CHK:
ENGR:
APPROVED FOR NAVAIR

AUTHENTICATED 7/6/99

DEPARTMENT OF THE NAVY
NAVAL AIR SYSTEMS COMMAND
WASHINGTON, D.C. 20361

PROPELLANT, DOUBLE BASE

SIZE	CODE IDENT NO	NAVAIR DRAWING NO.
D	30003	838AS207

SCALE: NONE | SHEET 1 OF 1

CLASSIFICATION OF CHARACTERISTICS (DOD-STD-2101)	
CRITICAL-	NONE
MAJOR-	NONE
MINOR-	ALL CHARACTERISTICS

REVISIONS			
REV	DESCRIPTION	DATE	APPROVAL
G	REPLACES REV F WITH CHANGE SEE ECP 9552200061 AND 9552200007	17 JUN 96	RAY WALDEN
H	SEE ECP 01030-5130W	12/4/01	J.L. GOODWIN
J	REDRAWN WITH CHANGE, SEE ECP 04019-5130W		

CAD MAINTAINED, CHANGES SHALL BE INCORPORATED BY THE DESIGN ACTIVITY

NOTES:

1. INTERPRET DRAWING IN ACCORDANCE WITH ASME Y14.100-2000 WITH APPENDICES B, C, D, AND E.
2. THIS RESIN SHALL BE A TWO PART SYSTEM, HAVING A MIXING RATIO BY WEIGHT OF ONE TO ONE AND A SPECIFIC GRAVITY OF 1.08.
3. THIS RESIN SHALL HAVE AN INITIAL VISCOSITY OF 7000 CPS AND A GEL TIME OF APPROXIMATELY 30 MINUTES AT 60°C (140°F).
4. CURING TIME WILL VARY FROM 24 TO 48 HOURS AT AMBIENT TEMPERATURES TO A MINIMUM OF 1 HOUR AT 95°C (203°F).
5. FOR EASE OF VERIFICATION OF COMPLETE SEALING, ADD 1 ± .5 PARTS COLOR CONCENTRATE BY WEIGHT TO 10 PARTS OF RESIN BY WEIGHT TO GIVE A VISIBLE RED COLOR TO THE RESIN BEFORE USE IN INTENDED APPLICATION. CONAP DS-1B31A (RED), (CYTEC INDUSTRIES, INC. 1405 BUFFALO ST, OLEAN, NY, PHONE 716-372-9650) IS A SUITABLE PRODUCT.
6. ONLY ITEMS DESCRIBED ON THIS DRAWING ARE APPROVED FOR USE IN THE APPLICATIONS SPECIFIED HEREON. A SUBSTITUTE ITEM SHALL NOT BE USED WITHOUT PRIOR APPROVAL BY THE QUALIFYING ACTIVITY.
7. IDENTIFICATION OF THE APPROVED SOURCE(S) OF SUPPLY HEREON IS NOT TO BE CONSTRUED AS A GUARANTEE OF PRESENT OR CONTINUED AVAILABILITY AS A SOURCE OF SUPPLY FOR THE ITEM DESCRIBED ON THE DRAWING.

DISTRIBUTION STATEMENT C: Distribution authorized to U.S. Government agencies and their contractors administrative or operational use, 7-1-93. Other requests for this document shall be referred to Commander, Indian Head Division, Naval Surface Warfare Center, Indian Head, MD 20640-5035.

APPROVED SOURCE(S) OF SUPPLY			
CAGE CODE	VENDOR	VENDOR'S ITEM IDENT NO.	APPLICATION
75037	3M CO. ELECTRICAL PRODUCTS DIVISION OEM 3M AUSTIN CTR AUSTIN, TX 78769-2963 PHONE: 800-676-8381	SCOTCHCAST BRAND ELECTRICAL RESIN NO. 8 (5236)	AIRCREW ESCAPE PROPULSION SYSTEMS CARTRIDGES AND CARTRIDGE ACTUATED DEVICES

SOURCE CONTROL DRAWING

NEXT ASSY	USED ON
APPLICATION	

UNLESS OTHERWISE SPECIFIED DIMENSIONS ARE IN INCHES
GENERAL TOLERANCES
XX DECIMALS ± —
XXX DECIMALS ± —
ANGLES ± —
MATERIAL: —
DO NOT SCALE DRAWING

INDIAN HEAD DIVISION
NAVAL SURFACE WARFARE CENTER
INDIAN HEAD, MD 20640-5035

ENGINEER
ENGINEER
CHECKED
DRAWN
APPROVED FOR NAVSEA — DATE

AUTHENTICATED 8/15/13

DEPARTMENT OF THE NAVY
NAVAL AIR SYSTEMS COMMAND
PATUXENT RIVER, MD 20670-1628

RESIN, EPOXY

SIZE	CAGE CODE	DRAWING NUMBER
D	30003	707AS114

SCALE: NONE — SHEET 1 OF 1

CLASSIFICATION OF CHARACTERISTICS (DOD-STD-2101)
CRITICAL- NONE
MAJOR- NONE
MINOR- ALL CHARACTERISTICS

REVISIONS

REV	DESCRIPTION	DATE	APPROVAL
B	REDRAWN WITH CHANGE SEE ECP 0352201020	20030422	

CAD MAINTAINED. CHANGES SHALL BE INCORPORATED BY THE DESIGN ACTIVITY.

NOTES:

1. INTERPRET DRAWING IN ACCORDANCE WITH ASME Y14.100-2000, APPENDIX B-E.
2. LUBRICANT SHALL BE MEDIUM CONSISTENCY.

ONLY ITEMS DESCRIBED ON THIS DRAWING ARE APPROVED FOR USE IN THE APPLICATIONS SPECIFIED HEREON. A SUBSTITUTE ITEM SHALL NOT BE USED WITHOUT PRIOR APPROVAL BY THE QUALIFYING ACTIVITY.

IDENTIFICATION OF THE APPROVED SOURCE(S) OF SUPPLY HEREON IS NOT TO BE CONSTRUED AS A GUARANTEE OF PRESENT OR CONTINUED AVAILABILITY AS A SOURCE OF SUPPLY FOR THE ITEM DESCRIBED ON THE DRAWING.

APPROVED SOURCE(S) OF SUPPLY		
VENDOR		
NAME AND ADDRESS	CAGE CODE	PART NUMBER
DOW CORNING CORP. MIDLAND, MICHIGAN 48640	5D028	33

SOURCE CONTROL DRAWING

DISTRIBUTION STATEMENT C:
DISTRIBUTION AUTHORIZED TO U.S. GOVERNMENT AGENCIES AND THEIR CONTRACTORS, ADMINISTRATIVE OR OPERATIONAL USE, 7-1-93. OTHER REQUESTS FOR THIS DOCUMENT SHALL BE REFERRED TO COMMANDER, INDIAN HEAD DIVISION, NAVAL SURFACE WARFARE CENTER, 101 STRAUSS AVENUE INDIAN HEAD, MD. 20640-5035.

NEXT ASSY	USED ON
834AS105	JAU-13/A
834AS104	JAU-14/A
834AS104	JAU-13/A
APPLICATION	

UNLESS OTHERWISE SPECIFIED DIMENSIONS ARE IN INCHES
GENERAL TOLERANCES
XX DECIMALS ± —
XXX DECIMALS ± —
ANGLES ± —
MATERIAL: ———
DO NOT SCALE DRAWING

INDIAN HEAD DIVISION
NAVAL SURFACE WARFARE CENTER
INDIAN HEAD, MD 20640-5035

ENGINEER
ENGINEER
CHECKED
DRAWN
APPROVED FOR NAVAL
AUTHENTICATED 1/7/76
DATE 1-7-76

DEPARTMENT OF THE NAVY
NAVAL AIR SYSTEMS COMMAND
WASHINGTON, D.C. 20360

LUBRICANT, O-RING

SIZE	CAGE CODE	DRAWING NUMBER
D	30003	834AS129

SCALE: NONE WEIGHT: --- SHEET 1 OF 1