US006450443B1

(12) **United States Patent**

(10) **Patent No.: US 6,450,443 B1**
(45) **Date of Patent: Sep. 17, 2002**

82,139

(54) **HIGH TORQUE 2.75-INCH ROCKET NOZZLE**

(75) Inventor:

(73) Assignee: **The United States of America as represented by the Secretary of the Navy**, Washington, DC (US)

(*) Notice: Subject to any disclaimer, the term of this patent is extended or adjusted under 35 U.S.C. 154(b) by 0 days.

(21) Appl. No.: **09/639,789**

(22) Filed: **Aug. 17, 2000**

(51) **Int. Cl.**[7] **F42B 10/26**; F42B 10/00

(52) **U.S. Cl.** **244/3.23**; 244/3.1; 239/265.15

(58) **Field of Search** 244/3.1, 3.23, 244/3.24–3.3, 3.22; 239/265.15, 265.11–265.14, 265.16–265.43

(56) **References Cited**

U.S. PATENT DOCUMENTS

3,260,205 A		7/1966	Dietrich	
3,430,900 A		3/1969	Turner et al.	244/3.23
3,635,404 A	*	1/1972	Hopkins et al.	239/265.15
4,203,569 A		5/1980	Marks	244/3.23
4,497,460 A		2/1985	Thorsted et al.	244/3.3
4,562,980 A	*	1/1986	Deans et al.	244/3.22
5,078,336 A	*	1/1992	Carter	244/3.22
5,511,745 A		4/1996	Faupell et al.	244/3.22
5,806,791 A		9/1998	Hatalsky et al.	244/3.24

FOREIGN PATENT DOCUMENTS

GB	2060078 A	*	4/1981	F02K/9/97

* cited by examiner

Primary Examiner—Bernarr E. Gregory
(74) *Attorney, Agent, or Firm*—Mark Homer

(57) **ABSTRACT**

A rocket spin control system for a tube launched rocket has a fixed position nozzle on the rocket and a set of internally positioned erodible or retractable vanes inside of the nozzle. The vanes are removed from the rocket propelling thrust at rocket exit from the tube.
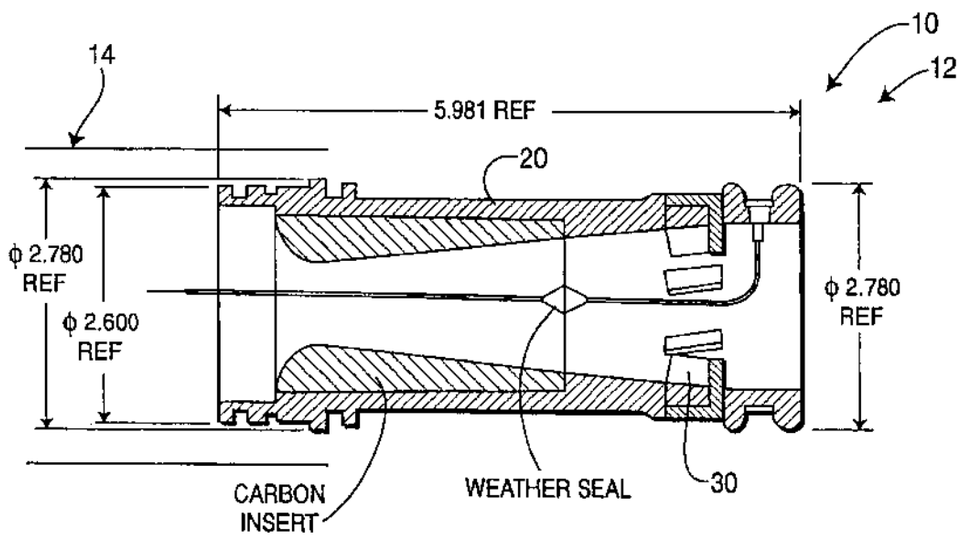
19 Claims, 2 Drawing Sheets