82119

US006371200B1

(12) **United States Patent**

(10) **Patent No.: US 6,371,200 B1**

(45) **Date of Patent: Apr. 16, 2002**

(54) **PERFORATED HEAT SINK**

(75) Inventor:

(73) Assignee: **The United States of America as represented by the Secretary of the Navy**, Washington, DC (US)

(*) Notice: Subject to any disclaimer, the term of this patent is extended or adjusted under 35 U.S.C. 154(b) by 0 days.

(21) Appl. No.: **09/922,538**

(22) Filed: **Aug. 3, 2001**

Related U.S. Application Data

(62) Division of application No. 09/443,120, filed on Nov. 18, 1999, now Pat. No. 6,110,306.

(51) **Int. Cl.**[7] **F28F 7/00**; H05K 7/20

(52) **U.S. Cl.** **165/80.3**; 165/185; 165/104.33; 361/690

(58) **Field of Search** 165/80.3, 185, 165/104.33; 361/690, 692, 702, 709, 697; 257/722; 415/115

(56) **References Cited**

U.S. PATENT DOCUMENTS

2,834,582 A * 5/1958 Kablitz 165/185
4,541,004 A * 9/1985 Moore 257/706
5,000,254 A * 3/1991 William 165/80.3
5,049,982 A * 9/1991 Lee et al. 257/722
5,224,538 A * 7/1993 Jacoby 165/185
5,734,552 A * 3/1998 Krein 165/80.3
5,854,739 A * 12/1998 Steiner et al. 165/80.3
5,884,691 A * 3/1999 Batchelder 165/80.3
5,915,463 A * 6/1999 Romero et al. 165/80.3
6,201,699 B1 * 3/2001 Ayres et al. 174/16.3
6,223,815 B1 * 5/2001 Kazuya 165/185

FOREIGN PATENT DOCUMENTS

JP 200022364 * 1/2000

* cited by examiner

Primary Examiner—Henry Bennett
Assistant Examiner—Tho Van Duong
(74) *Attorney, Agent, or Firm*—Mark Homer

(57) **ABSTRACT**

A compact perforated heat sink having high heat dissipation has a substrate with a multitude of holes and a thermal conductive pathway to conduct heat from a heat source to the substrate. The surface area of the holes is equal to or greater than the surface area of the substrate without the holes.
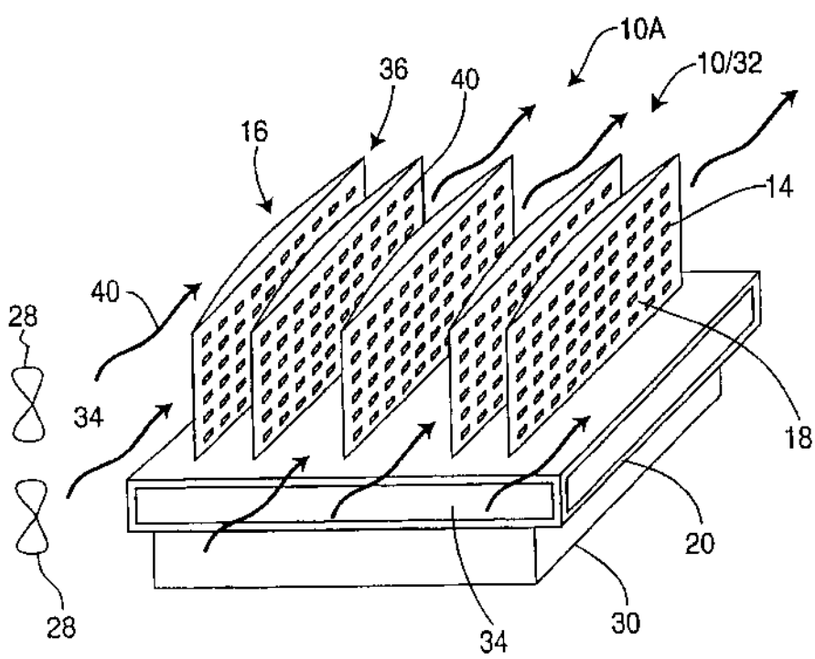
15 Claims, 2 Drawing Sheets