US006364601B1

(12) **United States Patent**

(10) **Patent No.: US 6,364,601 B1**
(45) **Date of Patent: Apr. 2, 2002**

~~820~~ 1
42061
or
820787

(54) **STRADDLE TYPE CONTAINER LIFTING DEVICE**

(75) Inventors:

(73) Assignee: **The United States of America as represented by the Secretary of the Navy**, Washington, DC (US)

(*) Notice: Subject to any disclaimer, the term of this patent is extended or adjusted under 35 U.S.C. 154(b) by 0 days.

(21) Appl. No.: **09/599,962**

(22) Filed: **Jun. 23, 2000**

(51) **Int. Cl.**[7] **B66C 1/00**; B66C 3/00

(52) **U.S. Cl.** ..... **414/803**; 414/392; 414/460; 414/561; 294/670 DA; 294/81.1; 294/81.53

(58) **Field of Search** ..... 414/392, 458, 414/459, 460, 561, 803; 294/670 DA, 81.1, 81.53

(56) **References Cited**

U.S. PATENT DOCUMENTS

3,945,673 A * 3/1976 Visser ..... 294/67 DA
3,993,202 A 11/1976 Neitzel
4,358,239 A 11/1982 Dechantsreiter
4,551,059 A * 11/1985 Petoia 414/459
4,595,224 A * 6/1986 Kaup 294/81.2
5,174,708 A * 12/1992 Ruder et al. 414/392
5,379,863 A 1/1995 Sugawara
5,409,346 A 4/1995 Grether
5,509,774 A 4/1996 Yoo
5,586,619 A 12/1996 Young
5,722,511 A 3/1998 Wakamiya
5,758,747 A 6/1998 Okazaki et al.
5,829,948 A 11/1998 Becklund
5,984,050 A 11/1999 Ronald

* cited by examiner

Primary Examiner—Eileen D. Lillis
Assistant Examiner—Charles A. Fox
(74) *Attorney, Agent, or Firm*—Mark Homer

(57) **ABSTRACT**

A lifting apparatus including a horizontal framework, a pair of extension assemblies, a pair of upper, middle, and lower telescoping mast assemblies, and two pairs of fork tine assemblies is provided. Each pair of the extension assemblies, the telescoping mast assemblies, and the fork tine assemblies is identical to the other one in structure and function. The horizontal framework is coupled to an overhead bridge crane and is accessible to any load located within a minimum amount of aisle space.
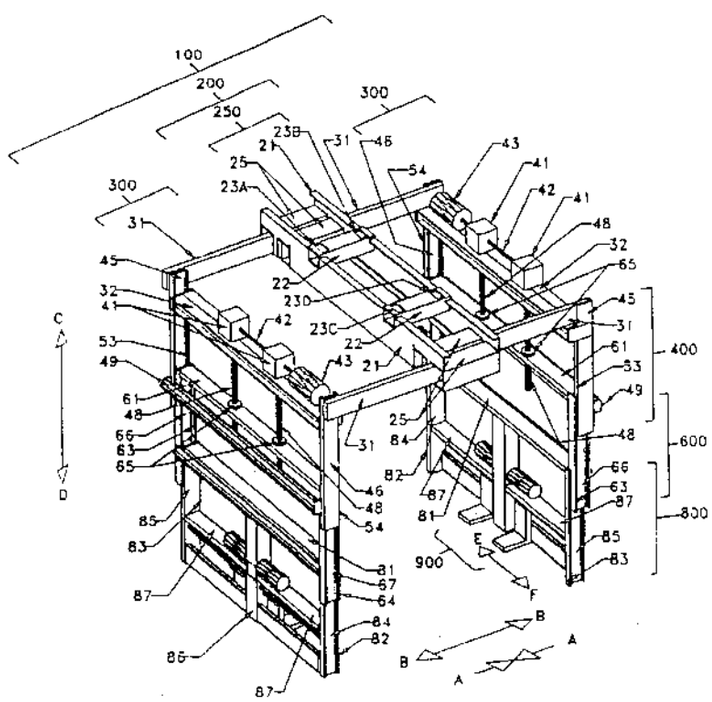
15 Claims, 5 Drawing Sheets