US006363855B1

79171

(12) **United States Patent**

(10) **Patent No.: US 6,363,855 B1**

(45) **Date of Patent: Apr. 2, 2002**

(54) **SOLID PROPELLANT ROCKET MOTOR THERMALLY INITIATED VENTING DEVICE**

(75) Inventors:

(73) Assignee: **The United States of America as represented by the Secretary of the Navy**, Washington, DC (US)

(*) Notice: Subject to any disclaimer, the term of this patent is extended or adjusted under 35 U.S.C. 154(b) by 0 days.

(21) Appl. No.: **09/697,244**

(22) Filed: **Oct. 27, 2000**

(51) **Int. Cl.**[7] **F41A 9/00**

(52) **U.S. Cl.** **102/481**; 102/378; 60/223; 60/253; 60/254

(58) **Field of Search** 102/374, 378, 102/481; 60/223, 253, 254

(56) **References Cited**

U.S. PATENT DOCUMENTS

3,134,222 A	*	5/1964	Maxson	102/378
3,173,364 A		3/1965	Nordzell	102/1
3,971,290 A	*	7/1976	Blain	102/378
4,084,512 A		4/1978	San Miguel	102/103
4,478,151 A		10/1984	Vetter et al.	102/481
4,597,261 A	*	7/1986	Dolan	60/223
4,709,637 A	*	12/1987	Bogguo	102/481
5,129,326 A		7/1992	Brogan	102/481
5,166,468 A	*	11/1992	Atkeson	102/481
5,466,537 A		11/1995	Diede et al.	428/548
5,786,544 A		7/1998	Gill et al.	102/481
5,813,219 A		9/1998	Gill et al.	60/223
6,148,729 A	*	11/2000	Smith et al.	102/378

* cited by examiner

Primary Examiner—Harold J. Tudor

(74) *Attorney, Agent, or Firm*—Mark Homer

(57) **ABSTRACT**

An ordnance venting system has a thermally initiated rapid deflagrating composition that detonates a high energy material. The high energy material is configured as a shaped charge and surrounds the ordnance housing of a rocket motor. During cook-off of the munition, the high energy material detonates, rupturing the structural integrity of the ordnance housing sufficiently to release pressure therefrom.
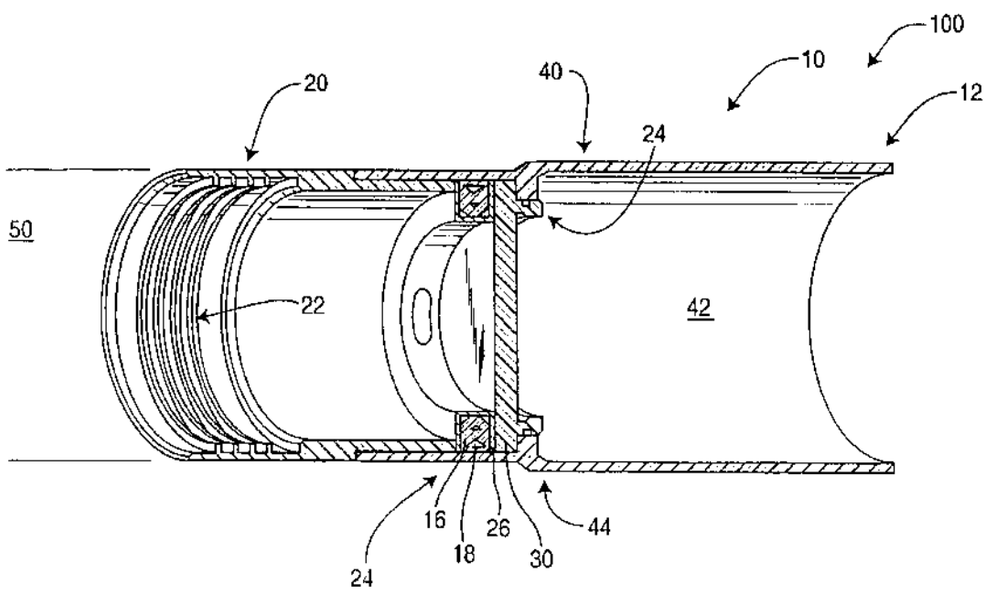
6 Claims, 1 Drawing Sheet