US006363828B1

82355

(12) **United States Patent**

(10) **Patent No.: US 6,363,828 B1**
(45) **Date of Patent: Apr. 2, 2002**

(54) **SHOCK DRIVEN PROJECTILE DEVICE**

(75) Inventors:

(73) Assignee: **The United States of America as represented by the Secretary of the Navy, Washington, DC (US)**

(*) Notice: Subject to any disclaimer, the term of this patent is extended or adjusted under 35 U.S.C. 154(b) by 0 days.

(21) Appl. No.: **09/538,266**

(22) Filed: **Mar. 30, 2000**

(51) **Int. Cl.**[7] **F42B 3/00**

(52) **U.S. Cl.** **89/1.13**; 42/51; 42/84; 102/202.14; 102/304

(58) **Field of Search** 42/51, 1.12, 84; 89/1.3, 1.13, 1.34, 36.74; 102/304, 306, 309, 202.14, 202.11, 202.9, 202.5

(56) **References Cited**

U.S. PATENT DOCUMENTS

229,058	A	*	6/1880	Spencer	89/1.34
3,248,504	A	*	4/1966	McGirr et al.	
4,150,266	A	*	4/1979	Patrichi	102/203
4,299,168	A	*	11/1981	Montoya	102/202.11
4,646,641	A	*	3/1987	Casey	102/306
5,016,537	A		5/1991	Pinson	
5,303,633	A		4/1994	Guthrie et al.	
5,743,246	A		4/1998	Mattern	
5,936,184	A	*	8/1999	Majerus	89/1.13
6,131,515	A	*	10/2000	Cook et al.	102/202.8
6,219,951	B1	*	4/2001	Cate	42/51

FOREIGN PATENT DOCUMENTS

CA	2031230	*	5/1992	102/306
DE	303886	*	12/1919	89/1.3
DE	307065	*	5/1920	89/1.3
GB	128279	*	6/1919	89/1.3
JP	2275206	*	11/1990	42/84

* cited by examiner

Primary Examiner—Stephen M. Johnson
(74) *Attorney, Agent, or Firm*—Mark Homer

(57) **ABSTRACT**

This invention relates to a device for accurately delivering a ballistically stable, monolothic projectile at repeatable velocities to a specified target using an explosive event without causing deformation or fragmentation of the projectile. In its most preferred embodiment, the invention will deliver a projectile using an explosive event without substantial deformation or altering of the geometric shape of the projectile. This invention was specifically developed as a preferred device to render safe the firing train of the fuze mechanism of unexploded ordnance (UXO) to dispose of the UXO more safely.

15 Claims, 3 Drawing Sheets

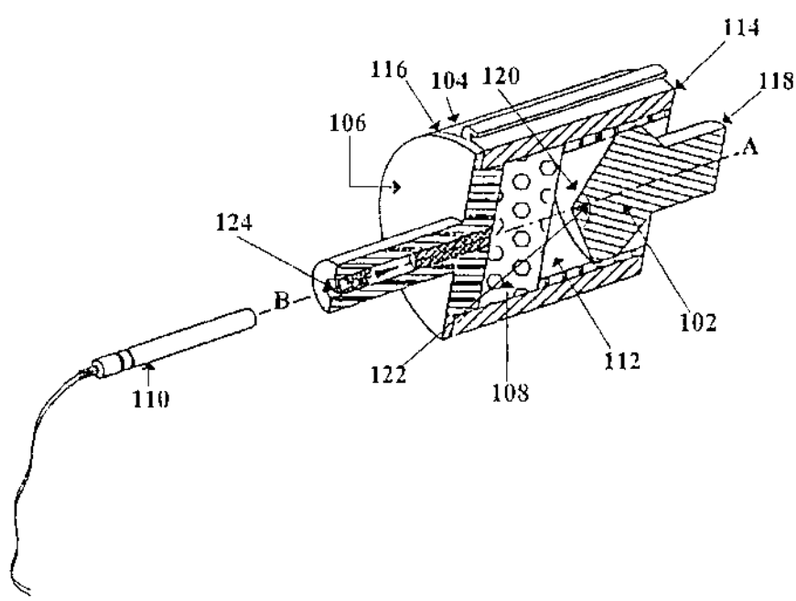

Cross sectional view