US006352029B1

(12) **United States Patent**

(10) **Patent No.: US 6,352,029 B1**
(45) **Date of Patent: Mar. 5, 2002**

(54) **THERMALLY ACTUATED RELEASE MECHANISM**

(75) Inventors:

(73) Assignee: **The United States of America as represented by the Secretary of the** Navy, Washington, DC (US)

(*) Notice: Subject to any disclaimer, the term of this patent is extended or adjusted under 35 U.S.C. 154(b) by 0 days.

(21) Appl. No.: **09/538,501**

(22) Filed: **Mar. 30, 2000**

(51) **Int. Cl.**[7] **C06B 45/00**
(52) **U.S. Cl.** **102/286**; 102/290; 102/292
(58) **Field of Search** 102/286, 287, 102/288, 290, 307, 306, 476, 292

(56) **References Cited**

U.S. PATENT DOCUMENTS

3,008,417 A * 11/1961 Keathley et al. 102/287
3,718,094 A * 2/1973 Bermender 102/287
4,354,884 A * 10/1982 Williams ..... 102/290 X
4,574,700 A * 3/1986 Lewis ..... 102/290 X
4,590,860 A * 5/1986 Kromrey ..... 102/290 X
4,597,994 A * 7/1986 Bolinder et al. ..... 102/290 X
4,619,201 A 10/1986 Romer et al. 102/283
4,654,093 A * 3/1987 Bolinder et al. ..... 102/290 X
4,896,609 A * 1/1990 Betts et al. ..... 102/307 X
4,950,342 A * 8/1990 Canterberry ..... 102/290 X
5,249,554 A 10/1993 Tamor et al. 123/90.51
5,524,544 A * 6/1996 O'Meara et al. ..... 102/291 X
5,538,795 A 7/1996 Barbee et al. 428/420
5,597,974 A * 1/1997 Voreck, Jr. et al. 102/307
5,712,445 A 1/1998 Kassuelke et al. 102/288
5,723,811 A * 3/1998 Bouet et al. 102/476
5,833,782 A 11/1998 Crane et al. 156/60
5,996,501 A * 12/1999 Spencer et al. 102/286

* cited by examiner

Primary Examiner—Peter A. Nelson
(74) *Attorney, Agent, or Firm*—Mark Homer

(57) **ABSTRACT**

This invention relates to explosive charges in which the chemical and physical composition changes gradually from point to point in order to accomplish differing, specific design objectives. More specifically, the invention relates to an explosive comprised by uniformly mixing components of differing chemical and physical properties in order to take advantage of the functions performed by these different components resulting in an explosive capable of performing multiple or specific tasks.

20 Claims, 4 Drawing Sheets

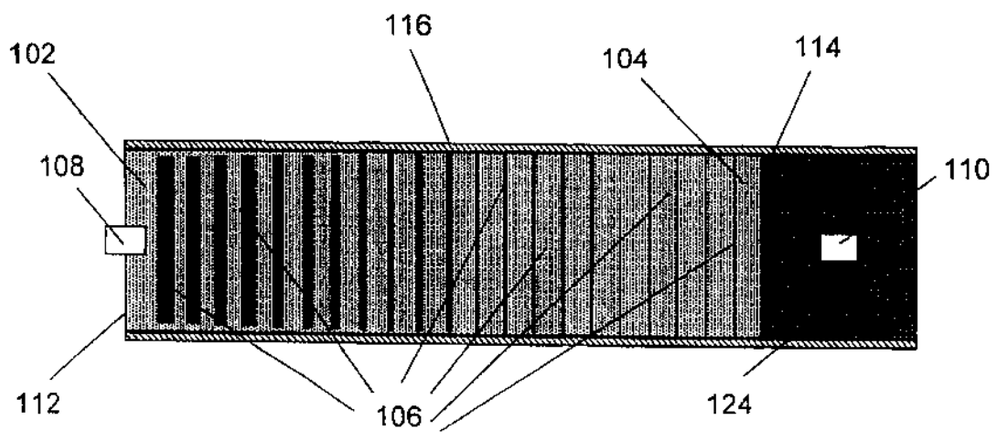

Multi-Mode Warhead Gradient Explosive