US006349474B1

(12) **United States Patent**

(10) **Patent No.: US 6,349,474 B1**

(45) **Date of Patent: Feb. 26, 2002**

78,379

(54) **CABLE CUTTER**

(75) Inventor:

(73) Assignee: **The United States of America as represented by the Secretary of the Navy**, Washington, DC (US)

(*) Notice: Subject to any disclaimer, the term of this patent is extended or adjusted under 35 U.S.C. 154(b) by 0 days.

(21) Appl. No.: **09/584,200**

(22) Filed: **May 31, 2000**

(51) **Int. Cl.**[7] **B26D 1/04**

(52) **U.S. Cl.** **30/228**; 30/90.1; 30/241; 30/DIG. 4

(58) **Field of Search** ..... 30/228, 90.1, 92, 30/180, 277, 278, 241, DIG. 4

(56) **References Cited**

U.S. PATENT DOCUMENTS

3,643,329 A	*	2/1972	Lieberman	30/180
3,739,673 A	*	6/1973	Temple	30/92
3,763,738 A	*	10/1973	Temple	30/228
4,026,028 A	*	5/1977	Green	30/241
4,136,445 A		1/1979	Grubb	
4,180,351 A	*	12/1979	Orrill et al.	30/DIG. 4
4,521,963 A		6/1985	Lind et al.	
4,587,733 A	*	5/1986	Staempfli	30/278
5,172,479 A		12/1992	Keeton	
5,224,268 A		7/1993	Pemberton	
5,233,749 A		8/1993	Saito et al.	
5,272,811 A		12/1993	Armand	
5,341,572 A		8/1994	Michelson	
5,416,975 A		5/1995	Saito et al.	
5,598,635 A		2/1997	Saito	
5,722,170 A		3/1998	Smith	

* cited by examiner

Primary Examiner—Hwei-Siu Payer

(74) *Attorney, Agent, or Firm*—Mark Homer

(57) **ABSTRACT**

A cable cutter for cutting a cable by using an explosive event is provided. The cable cutter includes a main body and an initiator assembly connected to the main body. The main cutter includes a cutterjaw and a receptacle having an opening accommodating a cable, a longitudinal bore formed in the housing and connected to the receptacle and having an inner opening and an outer opening, a cutter blade having a cutting edge facing the inner opening and a base facing the outer opening, being inserted into the bore of the receptacle, and slidably moving toward the cutter jaw within the bore of the receptacle to cut a cable disposed within the receptacle and between the cutter jaw and the cutting edge of the cutter blade. The initiator assembly includes a coupler, a passageway formed within the coupler, a cap covering having a hole connected to the coupler, and an explosive material and detonator are inserted through the hole in the cap into the passageway. A cone shaped surface is extended from a circumferential inner surface of one end of the passageway to an opening of the coupler connected to the main body.
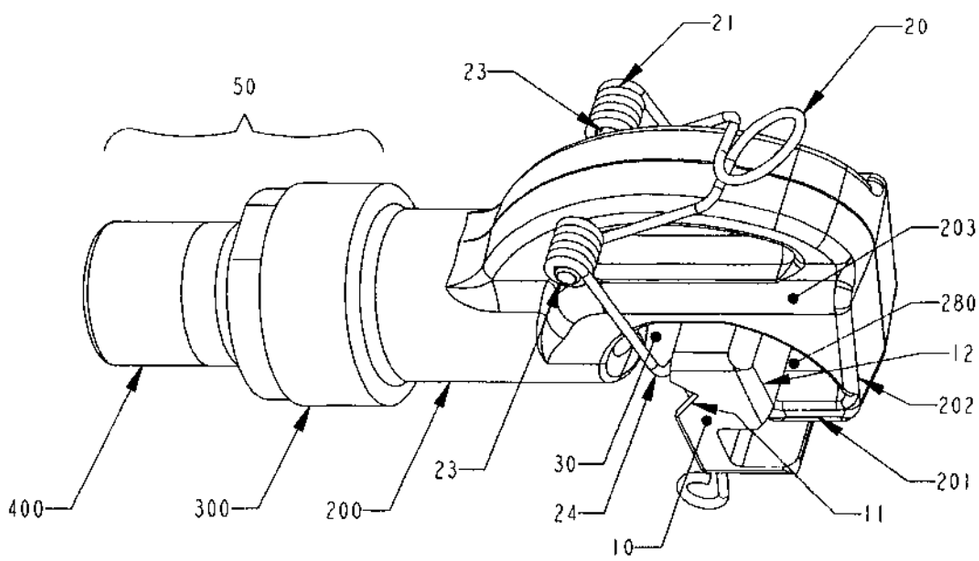
12 Claims, 14 Drawing Sheets