179,166

US006338242B1

(12) **United States Patent**

(10) **Patent No.: US 6,338,242 B1**

(45) **Date of Patent: Jan. 15, 2002**

(54) **VENTED MK 66 ROCKET MOTOR TUBE WITH A THERMOPLASTIC WARHEAD ADAPTER**

(75) Inventors:

(73) Assignee: **The United States of America as represented by the Secretary of the Navy**, Washington, DC (US)

(*) Notice: Subject to any disclaimer, the term of this patent is extended or adjusted under 35 U.S.C. 154(b) by 0 days.

(21) Appl. No.: **09/626,070**

(22) Filed: **Jul. 26, 2000**

(51) **Int. Cl.**[7] **F02K 9/00**

(52) **U.S. Cl.** **60/204**; 60/223; 60/254; 102/377; 102/481; 220/89.4

(58) **Field of Search** 60/223, 253, 254, 60/204; 102/481, 377, 220/89.4

(56) **References Cited**

U.S. PATENT DOCUMENTS

3,927,791 A		12/1975	Hershberger	220/89 B
4,557,198 A		12/1985	Hickey	103/481
4,991,513 A		2/1991	Malamas et al.	102/481
5,035,180 A		7/1991	Purcell et al.	102/481
5,035,182 A		7/1991	Purcell et al.	102/481
5,036,658 A	*	8/1991	Tate	60/253
5,155,298 A		10/1992	Koontz	102/481
5,311,820 A		5/1994	Ellingsen	102/481
5,337,672 A		8/1994	Boissiere et al.	102/481
5,398,498 A		3/1995	Mort et al.	60/223
5,735,114 A		4/1998	Ellingsen	60/39.1
5,939,662 A		8/1999	Bootes et al.	102/473
6,038,979 A	*	3/2000	Watson	102/481

OTHER PUBLICATIONS

Kim, S.T., "Vented MK 66 Rocket Motor Tube with Thermoplastic Warhead Adapter" Naval Warfare Surface Center Apr. 29, 1998.

* cited by examiner

Primary Examiner—Charles G. Freay
Assistant Examiner—Ehud Gartenberg
(74) *Attorney, Agent, or Firm*—Mark Homer

(57) **ABSTRACT**

An ordnance venting system has an ordnance device having a casing with a vent opening, a dome plug fitted into the formed vent opening and an adapter fitted over the dome plug on the outside of the casing. The adapter connects sufficiently to the casing to retain the dome plug against the formed vent opening for given pressures. The adapter melts at high temperatures and releases the dome plug to reduce the danger of explosion from heat induced over-pressurization.
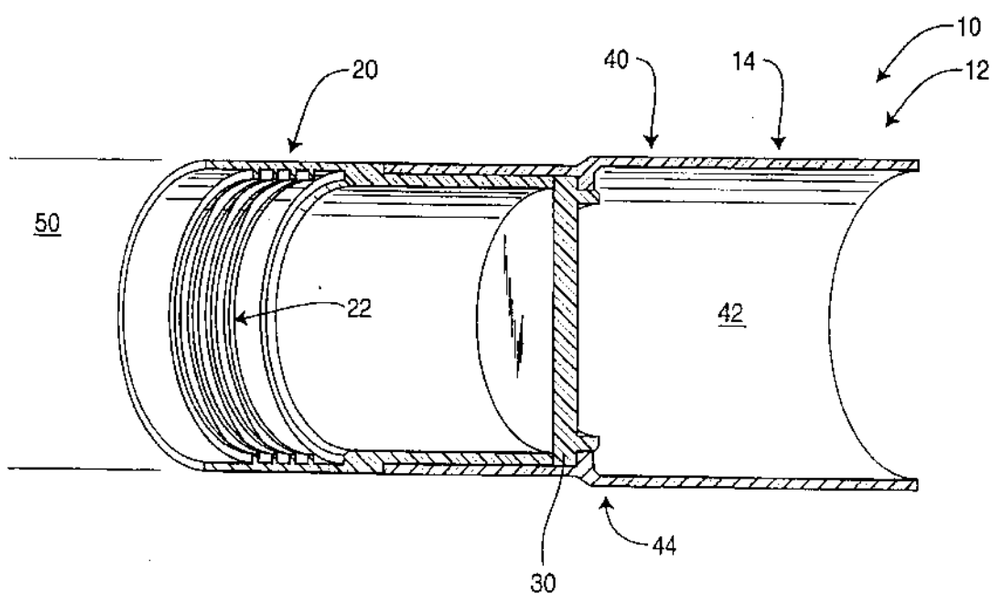
18 Claims, 1 Drawing Sheet