US006321656B1

77676

(12) **United States Patent**

(10) **Patent No.: US 6,321,656 B1**
(45) **Date of Patent: Nov. 27, 2001**

(54) **THERMALLY ACTUATED RELEASE MECHANISM**

(75) Inventor:

(73) Assignee: **The United States of America as represented by the Secretary of the Navy**, Washington, DC (US)

(*) Notice: Subject to any disclaimer, the term of this patent is extended or adjusted under 35 U.S.C. 154(b) by 0 days.

(21) Appl. No.: **09/533,084**

(22) Filed: **Mar. 22, 2000**

(51) **Int. Cl.**[7] **F42B 15/36**; F42B 15/34
(52) **U.S. Cl.** **102/377**; 102/481
(58) **Field of Search** 102/377, 481

(56) **References Cited**

U.S. PATENT DOCUMENTS

H1144	*	3/1993	Cherry et al.	60/39.1
4,753,465		6/1988	Dalby et al. .	
4,841,730		6/1989	McDonald .	
5,035,182		7/1991	Purcell et al. .	
5,036,658	*	8/1991	Tate	60/253
5,176,275		1/1993	Bowie .	
5,311,820	*	5/1994	Ellingsen	102/481
5,312,152		5/1994	Woebkenberg et al. .	
5,394,803	*	3/1995	Mort	102/377
5,482,574		1/1996	Goldstein .	
5,735,114	*	4/1998	Ellingsen	60/39.1
5,787,947		8/1998	Hertsgaard .	

FOREIGN PATENT DOCUMENTS

2 038 918	*	7/1980	(GB)	E05C/21/00

* cited by examiner

Primary Examiner—Charles T. Jordan
Assistant Examiner—Kimberly S Smith
(74) *Attorney, Agent, or Firm*—Mark Homer

(57) **ABSTRACT**

A container subject to damage through inadvertent overheating and pressure build up such as a rocket casing containing a propellant which can be subjected to damage or inadvertent firing when the ignition temperature is achieved inadvertently includes a thermally actuated release mechanism. The rocket casing includes two sections which are mechanically latched. A thermally responsive material such as Nitinol is provided in a shape such that upon being subjected to a predetermined transition temperature lower than the ignition temperature of the rocket propellant, it changes shape so as to mechanically unlatch the rocket casing sections.
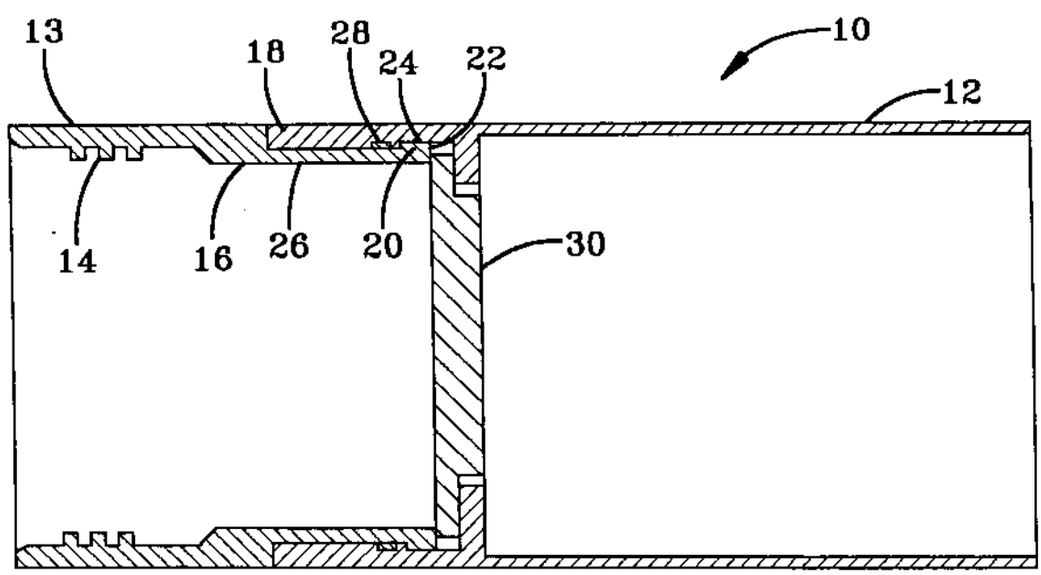
7 Claims, 2 Drawing Sheets