US006230626B1

78,811

(12) **United States Patent**

(10) **Patent No.: US 6,230,626 B1**

(45) **Date of Patent: May 15, 2001**

(54) **FLASHLESS MK 66 ROCKET MOTOR**

(75) Inventor:

(73) Assignee: **The United States of America as represented by the Secretary of the Navy**, Washington, DC (US)

(*) Notice: Subject to any disclaimer, the term of this patent is extended or adjusted under 35 U.S.C. 154(b) by 0 days.

(21) Appl. No.: **09/511,376**

(22) Filed: **Feb. 23, 2000**

(51) **Int. Cl.**[7] **C06B 45/00**; C06D 5/00; C06D 5/06

(52) **U.S. Cl.** **102/289**; 102/291; 102/287; 102/290; 60/253; 60/254; 60/255; 60/256

(58) **Field of Search** 102/289, 295, 102/287, 290; 60/253–256

(56) **References Cited**

U.S. PATENT DOCUMENTS

3,107,620 *	10/1963	O'Donnell	102/291
3,166,896	1/1965	Breitengross, Jr. et al.	60/35.6
3,508,494 *	4/1970	Caveny	102/291
3,951,706	4/1976	Eldridge	149/19.8
3,960,621	6/1976	Whitworth et al.	149/65
3,985,594	10/1976	Bjorn	149/108.4
4,381,270	4/1983	Bjorn et al.	264/3 B
4,642,983	2/1987	Melvin et al.	60/219
4,701,228	10/1987	Lagreze et al.	149/109.6
5,565,643	10/1996	Raines et al.	102/289

* cited by examiner

Primary Examiner—Michael J. Carone
Assistant Examiner—Glenda L. Sánchez
(74) *Attorney, Agent, or Firm*—Mark Homer

(57) **ABSTRACT**

A flashless rocket propellent has a continuous potassium sulfate rod extending though the length of the propellent component. The flashless rocket propellent is particularly useful in the MK 66 Rocket Motor.
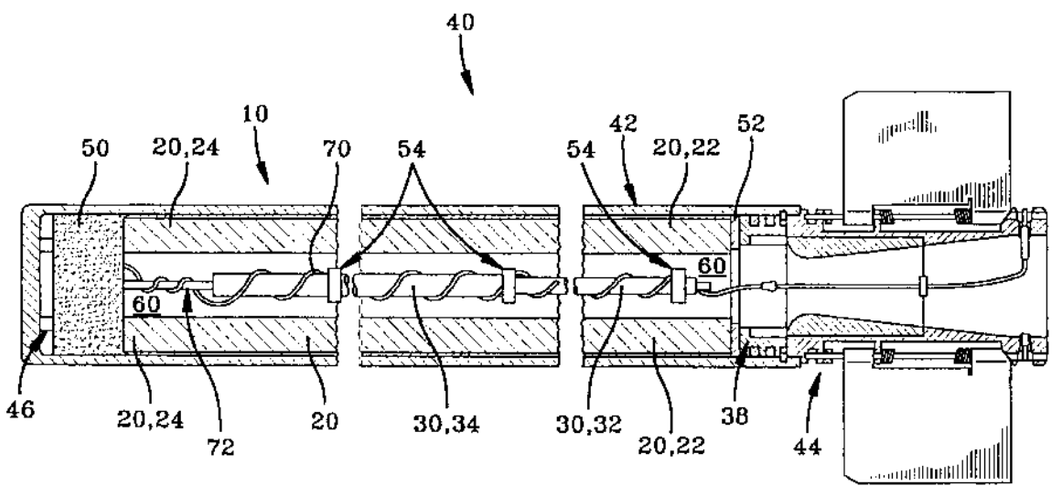
19 Claims, 2 Drawing Sheets