US006202560B1

75, 859

(12) **United States Patent**

(10) **Patent No.: US 6,202,560 B1**

(45) **Date of Patent: Mar. 20, 2001**

(54) **EXPLOSIVELY STARTED PROJECTILE GUN AMMUNITION**

(75) Inventor:

(73) Assignee: **The United States of America as represented by the Secretary of the Navy**, Washington, DC (US)

(*) Notice: Subject to any disclaimer, the term of this patent is extended or adjusted under 35 U.S.C. 154(b) by 0 days.

(21) Appl. No.: **09/225,677**

(22) Filed: **Jan. 6, 1999**

(51) **Int. Cl.**[7] **F42B 5/02**

(52) **U.S. Cl.** **102/430**; 102/443; 102/470

(58) **Field of Search** 102/202, 430, 102/431, 433, 434, 440, 441, 443, 469, 470

(56) **References Cited**

U.S. PATENT DOCUMENTS

314,127	*	3/1885	Hope et al.	102/443
390,232	*	10/1888	Hurst	102/443
562,535	*	6/1896	Hurst	102/443
948,148	*	2/1910	Schenk .	
1,556,160	*	10/1925	Riggs .	
4,245,557	*	1/1981	Knappworst et al. .	
4,770,099	*	9/1988	Brede et al. .	
4,799,428	*	1/1989	Yunan .	
4,803,926	*	2/1989	Barton et al.	102/430
5,052,302	*	10/1991	Taddeo et al.	102/470
5,123,356	*	6/1992	Brooks et al. .	
5,173,571	*	12/1992	Montgomery	102/443
5,465,665	*	11/1995	Diehl	102/470
5,557,059	*	9/1996	Warren et al.	102/443

FOREIGN PATENT DOCUMENTS

4841	*	4/1892	(CH)	102/433
2517046	*	5/1983	(FR)	102/470

* cited by examiner

Primary Examiner—Harold J. Tudor

(74) *Attorney, Agent, or Firm*—Mark Homer

(57) **ABSTRACT**

A separate explosive charge within a cartridge is detonated to initiate motion of a projectile and effect delayed ignition of a larger volume of primary propellant. Steady burning of the ignited primary propellant after motion of the projectile is initiated, continues its propulsion with a pressure/displacement profile.
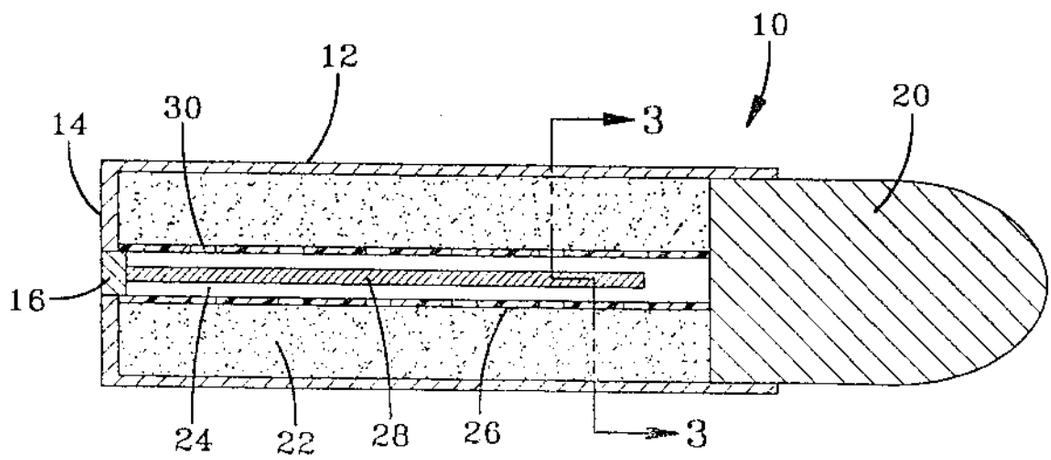
7 Claims, 1 Drawing Sheet