US005120024A

United States Patent [19]

[11] Patent Number: 5,120,024

[45] Date of Patent: Jun. 9, 1992

[54] PAYOUT TENSION CONTROL SYSTEM FOR REEL MOUNTED CABLE

[75] Inventor:

[73] Assignee: The United States of America as represented by the Secretary of the Navy, Washington, D.C.

[21] Appl. No.: 529,294

[22] Filed: May 29, 1990

[51] Int. Cl.[5] B66D 1/00

[52] U.S. Cl. 254/391; 254/335; 242/128

[58] Field of Search 242/128, 82; 254/264, 254/391, 335, 334

[56] References Cited

U.S. PATENT DOCUMENTS

1,955,785	4/1934	Arkema et al.	242/128
2,487,889	11/1949	Moore	242/128
3,073,545	1/1963	Frate et al.	242/128
3,372,665	3/1968	Mesler	242/128
3,655,108	4/1972	Bonnabaud et al.	242/128
3,863,861	2/1975	Bellasio	242/128
4,135,679	1/1979	Murphy et al.	242/128
4,227,678	10/1980	Laky	254/391
4,253,624	3/1981	Colbert	242/128
4,320,619	3/1982	Allard	242/128 X
4,322,047	3/1982	Bonnabaud	242/128
4,465,161	8/1984	Ohta et al.	254/391 X
4,681,277	7/1987	Kosch	242/128 X
4,848,078	7/1989	White et al.	242/128 X
4,895,348	1/1990	Craig	254/391

FOREIGN PATENT DOCUMENTS

296987	7/1929	United Kingdom	242/128
341314	1/1931	United Kingdom	242/128

Primary Examiner—Katherine Matecki

Attorney, Agent, or Firm—Kenneth E. Walden; Jacob Shuster

[57] ABSTRACT

A payout control arm is angularly displaceable about a brake shaft during payout of a cable from a storage reel in response to tensioning forces transmitted through the cable from a payout load, the cable being entrained about a pulley rotatably carried on the control arm in spaced relation to the brake shaft. Gearing drivingly connects the pulley to the brake shaft to stop payout and cause the cable to frictionally grip the pulley in response to brake engagement thereby preventing continued transmittal of tensioning forces to the reel.
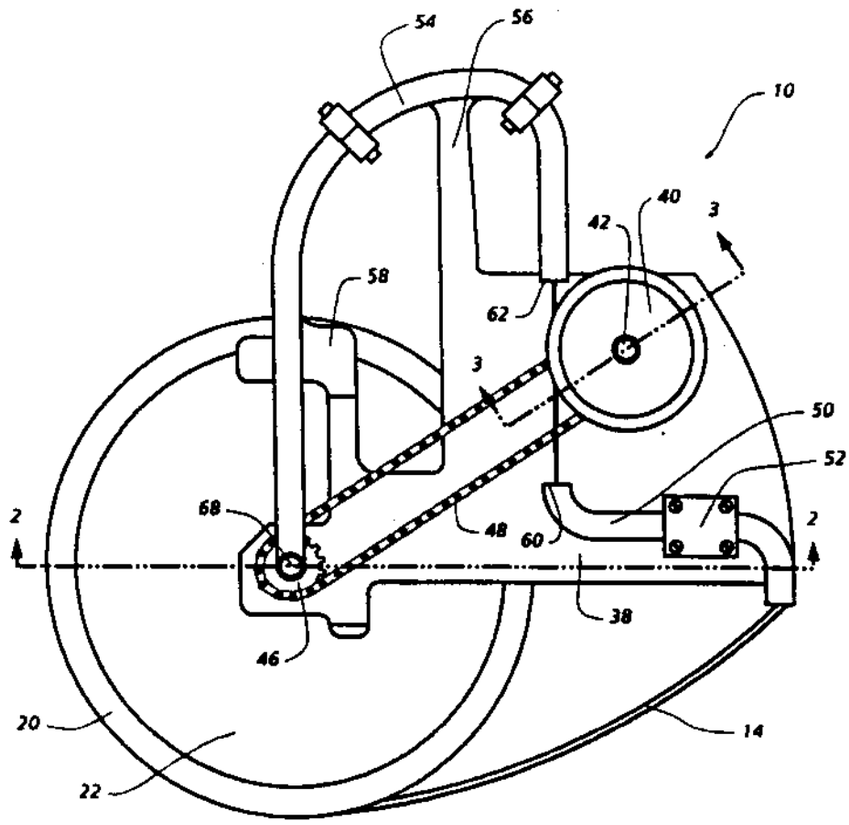
9 Claims, 2 Drawing Sheets