64124

United States Patent [19]

[11] Patent Number: 4,495,848

[45] Date of Patent: Jan. 29, 1985

[54] PYRO-GUN

[75] Inventors:

[73] Assignee: The United States of America as represented by the Secretary of the Navy, Washington, D.C.

[21] Appl. No.: 285,174

[22] Filed: Jul. 6, 1981

[51] Int. Cl.[3] B23K 7/10; F23Q 7/12

[52] U.S. Cl. 89/1.1; 42/84; 102/220; 266/66; 431/256

[58] Field of Search ..... 42/84, 1 R; 89/1 B, 89/1 R; 102/335, 220, 218; 266/48, 66, 77; 431/91, 127, 128, 256, 258, 254, 255

[56] References Cited

U.S. PATENT DOCUMENTS

3,225,695 12/1965 Kapp et al. 102/220
3,427,924 2/1969 Johnsen 42/84
3,618,525 11/1971 Fritz 102/220
3,713,636 1/1973 Helms et al. 102/335
3,734,476 5/1973 Holzman 266/48
3,864,862 2/1975 Brunger et al. 42/84
3,878,790 4/1975 Meyer 102/220

OTHER PUBLICATIONS

Rosenthal, Louis A.; "Novel Electroexplosive Device Firing Method": Review Scientific Instrumentation; Mar. 1974; p. 450.

Primary Examiner—Charles T. Jordan
Attorney, Agent, or Firm—Robert F. Beers; Kenneth E. Walden; John C. LaPrade

[57] ABSTRACT

A hand held, shoulder mounted gun with time delay circuitry means to safely ignite a powdered pyrotechnic material.
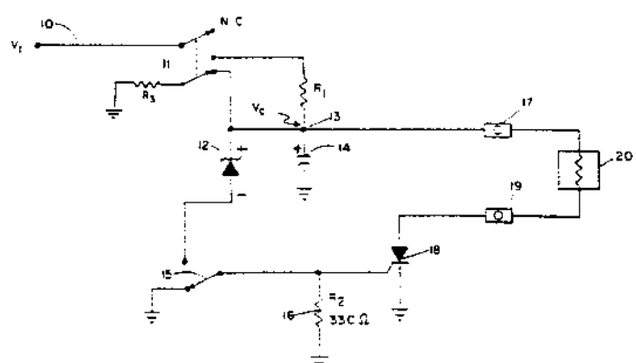
9 Claims, 2 Drawing Figures