Patent notebook 65-603

Indian Head NAVEODTECHCEN

United States Patent [19]

[11] **4,422,471**

[45] **Dec. 27, 1983**

[54] **FOUR BAR MANIFOLD**

[75] Inventor:

[73] Assignee: **The United States of America as represented by the Secretary of the Navy, Washington, D.C.**

[21] Appl. No.: **381,829**

[22] Filed: **May 24, 1982**

[51] **Int. Cl.**[3] **B63K 7/00**

[52] **U.S. Cl.** ..... **137/561 A**; 266/48

[58] **Field of Search** ..... 266/51, 52, 48; 137/561 R, 561 A

[56] **References Cited**

U.S. PATENT DOCUMENTS

1,373,043	3/1921	Amberg	239/548
1,947,755	2/1934	Bucknam et al.	266/48
2,444,851	7/1948	Rogers	141/209
2,515,301	7/1950	Hughey	266/51
2,786,493	3/1957	Bayer	137/118
3,643,689	2/1972	Isreeli et al.	137/561 A
3,848,633	11/1974	Hurtig et al.	137/561 A

Primary Examiner—A. Michael Chambers

Attorney, Agent, or Firm—R. F. Beers; K. E. Walden; D. J. Breh

[57] **ABSTRACT**

A gas flow distribution manifold for distributing oxygen equally to a plurality of burn bar torches allowing large holes to be burned in steel objects is disclosed. The manifold includes a central plenum chamber connected to radial cross passages. Orifices connect the cross passages to outlet chambers wherein the burn bar torches are mounted. Sonic gas flow is maintained through the orifices providing equal flow to the torches.
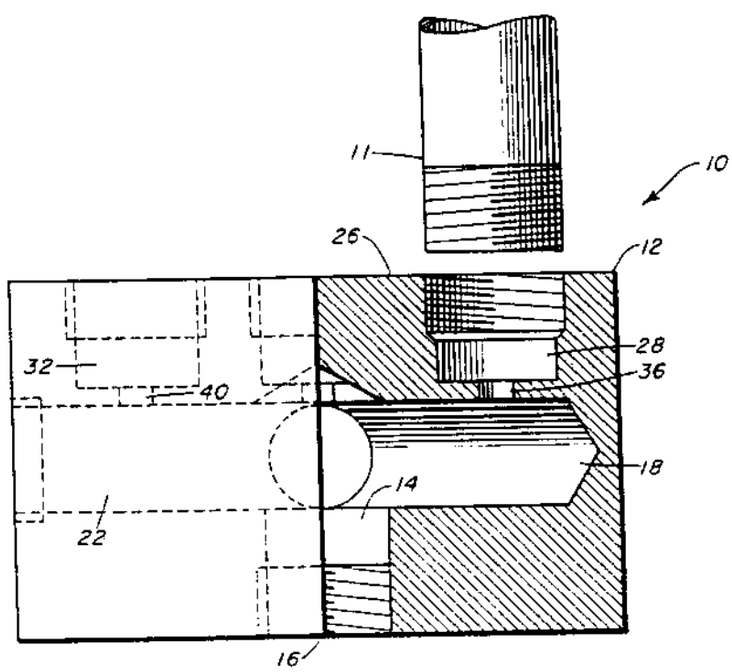
2 Claims, 2 Drawing Figures