February 4, 2004 3:39 PM

DWG NO.	SH	REV
7322031	1	—

PART NUMBER
7322031-1

REVISIONS

ZONE	REV		DATE(YR-MO-DY)	APPROVED

CAD MAINTAINED. CHANGES SHALL BE INCORPORATED BY THE DESIGN ACTIVITY.

NOTES: UNLESS OTHERWISE SPECIFIED.

1. INVESTMENT CAST PER AMS5344
2. PENETRANT INSPECT PER ASTM E1417
3. INSPECT PER MIL-STD-1907, GRADE C
4. AGE HARDEN TO H1150 COND. PER MIL-H-6875, CLASS D
5. PASSIVATE PER ASTM A380.
6. STENCIL OR STAMP 53711-7322031 USING APPLICABLE DASH NO. PER MIL-STD-130 USING FIND NO. 2. LOCATION OPTIONAL.
7. INTERPRET SURFACE TEXTURE IN ACCORDANCE WITH ANSI B46.1
8. INTERPRET DIMENSIONS AND TOLERANCES IN ACCORDANCE WITH ANSI Y14.5

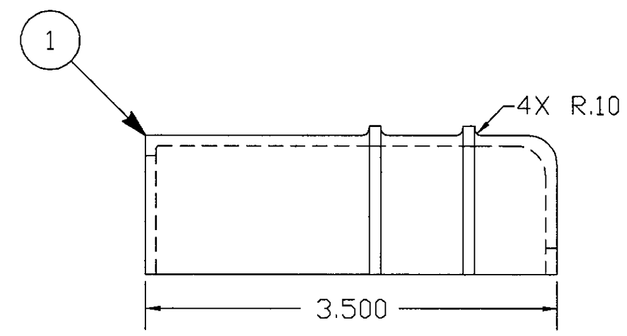

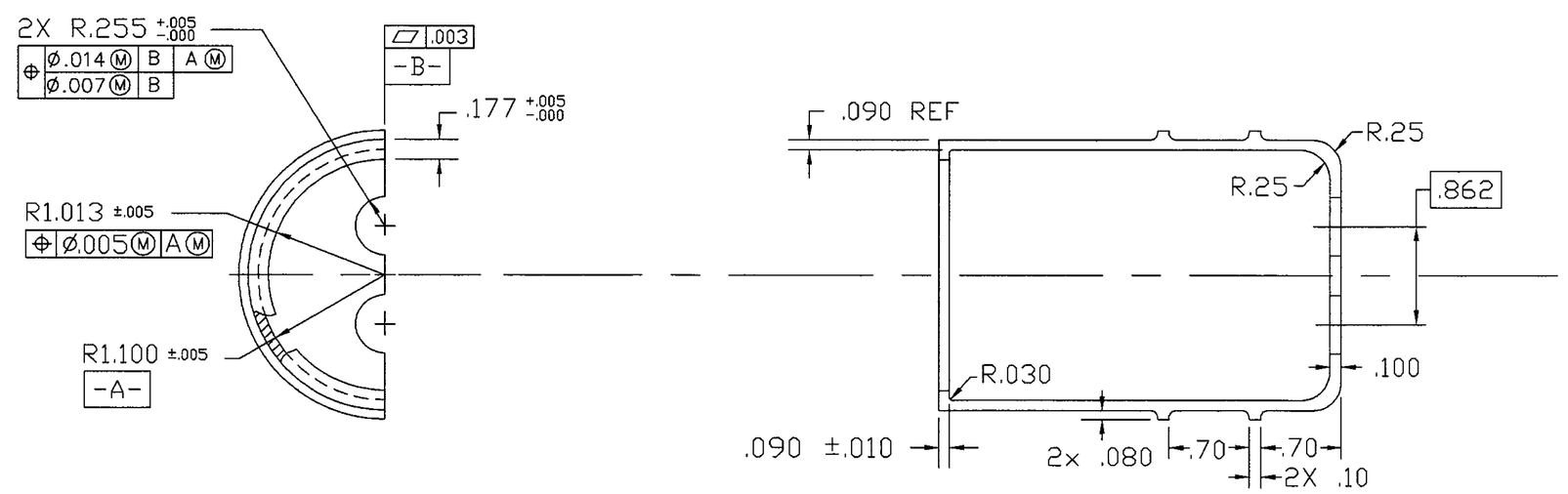

FIND NO.	QTY REQD	CAGE CODE	PART OR IDENTIFYING NO.	SPECIFICATION NO.	NOMENCLATURE OR DESCRIPTION	NOTE
2	AR			A-A-208	INK, STENCIL, MARKING, BLACK	6
1	AR			AMS 5643	17-4 PH CRES BAR	

PARTS LIST

UNLESS OTHERWISE SPECIFIED DIMENSIONS ARE IN INCHES
GENERAL TOLERANCES

XX DECIMALS	XXX DECIMALS	ANGLES
± .03	± .010	± 5°

REMOVE BURRS AND BREAK SHARP EDGES MAX.
INSIDE CORNER R. MAX
SURFACE ROUGHNESS 125

MATERIAL:
SEE PARTS LIST

INTERPRET DRAWING IAW MIL-STD-100
DO NOT SCALE THIS DRAWING

NEXT ASSY	USED ON
7335979	TOMAHAWK

APPLICATION

SUMMATION CLASSIFICATION OF CHARACTERISTICS DOD-STD-2101 (OS)
CRITICAL NONE
MAJOR NONE

NAVAL SURFACE WARFARE CENTER
PORT HUENEME DIVISION
4363 MISSILE WAY
PORT HUENEME, CA. 93043

ENGR		99-02-01
CHECKED		99-02-01
DRAWN		99-02-01

APPROVED FOR NAVSEA DATE 990415

DEPARTMENT OF THE NAVY
NAVAL SEA SYSTEMS COMMAND
WASHINGTON, D.C. 20362-5101

HOUSING, PROTECTIVE

SIZE	CAGE CODE	DWG NO.
D	53711	7322031

SCALE: 1/1 SHEET 1 OF 1

DISTRIBUTION STATEMENT D: DISTRIBUTION AUTHORIZED TO DOD AND DOD CONTRACTORS ONLY: ADMINISTRATIVE OR OPERATIONAL USE; 99-03-26. OTHER REQUESTS SHALL BE REFERRED TO PROGRAM EXECUTIVE OFFICE, THEATER SURFACE COMBATANTS (PEO (TSC)), ATTN: PMS410.

WARNING - THIS DOCUMENT CONTAINS TECHNICAL DATA WHOSE EXPORT IS RESTRICTED BY THE ARMS EXPORT CONTROL ACT (TITLE 22, U.S.C. SEC 2751, ET SEQ). VIOLATIONS OF THESE EXPORT LAWS ARE SUBJECT TO SEVERE CRIMINAL PENALTIES. DISSEMINATE IN ACCORDANCE WITH PROVISIONS OF DOD DIRECTIVE 5230.25.

DESTRUCTION NOTICE: DESTROY BY ANY METHOD THAT WILL PREVENT DISCLOSURE OF CONTENTS OR RECONSTRUCTION OF THE DOCUMENT.