CLASSIFICATION OF CHARACTERISTICS (DOD-STD-2101)
CRITICAL - NONE
MAJOR - NONE
MINOR - ALL CHARACTERISTICS

REVISIONS			
REV	DESCRIPTION	DATE	APPROVED

NOTES:

1. INTERPRET DRAWING IN ACCORDANCE WITH MIL-STD-100.
2. UNLESS OTHERWISE SPECIFIED:
   REMOVE ALL BURRS AND BREAK SHARP EDGES .010 MAX.
   SURFACE FINISH 125.

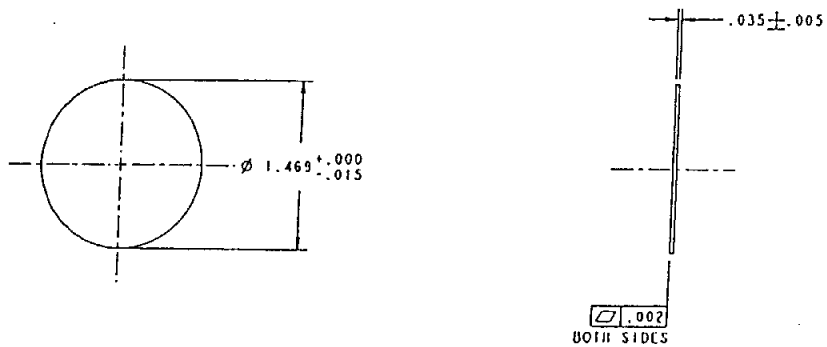

DISTRIBUTION STATEMENT C:
DISTRIBUTION AUTHORIZED TO U.S. GOVERNMENT AGENCIES AND THEIR CONTRACTORS, ADMINISTRATIVE OR OPERATIONAL USE, 3-09-92. OTHER REQUESTS FOR THIS DOCUMENT SHALL BE REFERRED TO COMMANDER, INDIAN HEAD DIVISION, NAVAL SURFACE WARFARE CENTER, 101 STRAUSS AVENUE INDIAN HEAD, MD. 20640-5035.

FIND NO	QTY REQD	CODE IDENT	PART NO. OR IDENTIFYING NO	SPECIFICATION NO.	NOMENCLATURE OR DESCRIPTION	MATERIAL OR NOTE

PARTS LIST

NEXT ASSY.	USED ON
APPLICATION	

UNLESS OTHERWISE SPECIFIED DIMENSIONS ARE IN INCHES.
TOLERANCE: ANGLES ±
FRACTIONS ±
2 PLACE DECIMALS ±
3 PLACE DECIMALS ±
MATERIAL:
ALUMINUM ALLOY 6061, TEMPER "F" PER QQ-A-250/11

INDIAN HEAD DIVISION
NAVAL SURFACE WARFARE CENTER
INDIAN HEAD, MD 20640-5035

APPROVALS	DATE
PREP: NSWCIH	09MAR92
CHK: [illegible]	[illegible]
ENGR: [illegible]	[illegible]
[illegible]	[illegible]

APPROVED FOR NAVAIR [illegible] 18 Nov 94

DEPARTMENT OF THE NAVY
NAVAL AIR SYSTEMS COMMAND
WASHINGTON, D.C. 20361

DISC

SIZE	CODE IDENT NO	NAVAIR DRAWING NO.
D	30003	837AS249

SCALE: 2/1 SHEET 1 OF 1

CLASSIFICATION OF CHARACTERISTICS (DOD-STD-2101)
CRITICAL - NONE
MAJOR - NONE
MINOR - ALL CHARACTERISTICS

REVISIONS			
REV	DESCRIPTION	DATE	APPROVED

NOTES:

1. INTERPRET DRAWING IN ACCORDANCE WITH MIL-STD-100.

2. COMMERCIAL MANUFACTURING PRACTICES ARE ASSUMED. VARIATION FROM DIMENSIONS AND TOLERANCES MUST BE APPROVED BY INDIAN HEAD DIVISION, NAVAL SURFACE WARFARE CENTER, INDIAN HEAD, MD. 20640-5035.

3. MATERIAL:
STEEL, CRES, WIRE, ROUND PER QQ-S-763, CLASS 304, 9 GAUGE (.148 INCH DIA.).

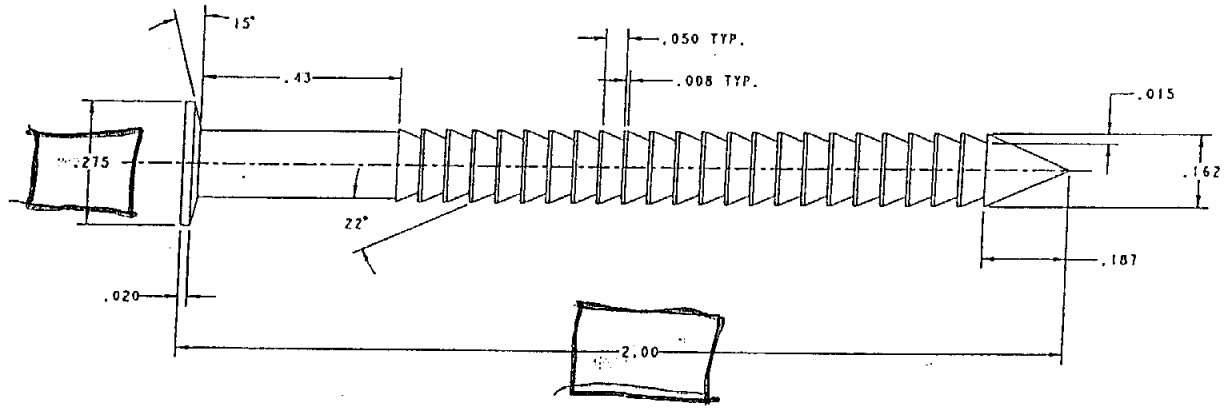

Pet H. Thr
1 May 02

IDENTIFICATION OF THE SUGGESTED ITEMS HEREON IS NOT TO BE CONSTRUED AS A GUARANTEE OF PRESENT OR CONTINUED AVAILABILITY.

SUGGESTED SOURCE(S) OF SUPPLY		
CAGE CODE	VENDOR PART NO.	VENDOR ADDRESS
AJ153	837AS254	C-S METALS SERVICE INC. 7325 WASHINGTON BLVD. BALTIMORE, MD 21227

DISTRIBUTION STATEMENT C:
DISTRIBUTION AUTHORIZED TO U.S. GOVERNMENT AGENCIES AND THEIR CONTRACTORS, ADMINISTRATIVE OR OPERATIONAL USE, 3-09-92. OTHER REQUESTS FOR THIS DOCUMENT SHALL BE REFERRED TO COMMANDER, INDIAN HEAD DIVISION, NAVAL SURFACE WARFARE CENTER, 101 STRAUSS AVENUE INDIAN HEAD, MD. 20640-5035.

VENDOR ITEM DRAWING

FIND NO	QTY REQD	CODE IDENT	PART NO. OR IDENTIFYING NO	SPECIFICATION NO.	NOMENCLATURE OR DESCRIPTION	MATERIAL OR NOTE

PARTS LIST

UNLESS OTHERWISE SPECIFIED DIMENSIONS ARE IN INCHES.
TOLERANCE: ANGLES ± 2°
FRACTIONS ± ——
2 PLACE DECIMALS ± .05
3 PLACE DECIMALS ± .010
MATERIAL: 3

INDIAN HEAD DIVISION NAVAL SURFACE WARFARE CENTER INDIAN HEAD, MD 20640-5035

APPROVALS	DATE
PREP: NSWCIH	10MAR92
CHK: [signature]	[illegible]
ENGR: [signature]	[illegible]
[illegible]	[illegible]

APPROVED FOR NAVAIR [signature] 18 Nov 94

DEPARTMENT OF THE NAVY
NAVAL AIR SYSTEMS COMMAND
WASHINGTON, D.C. 20361

PIN, RETAINER

SIZE	CODE IDENT NO.	NAVAIR DRAWING NO.
D	30003	837AS254

SCALE: 8/1 SHEET 1 OF 1

NEXT ASSY. USED ON
APPLICATION

CLASSIFICATION OF CHARACTERISTICS (DOD-STD-2101)
CRITICAL - NONE
MAJOR - NONE
MINOR - ALL CHARACTERISTICS

REVISIONS			
REV	DESCRIPTION	DATE	APPROVED

NOTES:

1. INTERPRET DRAWING IN ACCORDANCE WITH MIL-STD-100.
2. UNLESS OTHERWISE SPECIFIED:
   SURFACE FINISH 125

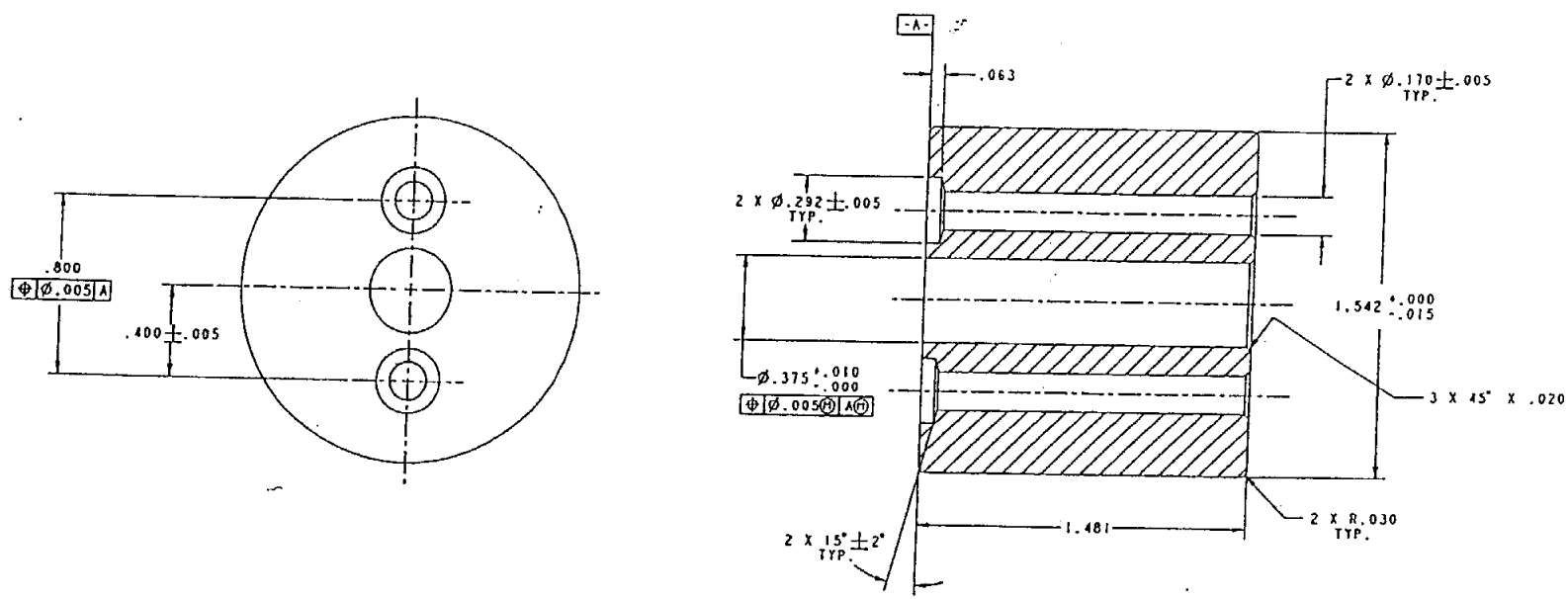

DISTRIBUTION STATEMENT C:
DISTRIBUTION AUTHORIZED TO U.S. GOVERNMENT AGENCIES AND THEIR CONTRACTORS, ADMINISTRATIVE OR OPERATIONAL USE, 3-09-92. OTHER REQUESTS FOR THIS DOCUMENT SHALL BE REFERRED TO COMMANDER, INDIAN HEAD DIVISION, NAVAL SURFACE WARFARE CENTER, 101 STRAUSS AVENUE INDIAN HEAD, MD. 20640-5035.

FIND NO	QTY REQD	CODE IDENT	PART NO. OR IDENTIFYING NO	SPECIFICATION NO.	NOMENCLATURE OR DESCRIPTION	MATERIAL OR NOTE

PARTS LIST

NEXT ASSY.	USED ON
APPLICATION	

UNLESS OTHERWISE SPECIFIED DIMENSIONS ARE IN INCHES.
TOLERANCE: ANGLES ± ——
FRACTIONS ± ——
2 PLACE DECIMALS ± ——
3 PLACE DECIMALS ± .010
MATERIAL:
PLASTIC, PRE-MIX, POLYESTER PER MIL-P-43043

INDIAN HEAD DIVISION NAVAL SURFACE WARFARE CENTER INDIAN HEAD, MD 20640-5035

APPROVALS		DATE
PREP:	NSWCIH	10MAR92
CHK:	[signature]	16 Nov 94
ENGR:	C.K. [signature]	16 Nov 94
[signature]	[signature]	18 Nov 94

APPROVED FOR NAVAIR [signature] 18 Nov 94

DEPARTMENT OF THE NAVY
NAVAL AIR SYSTEMS COMMAND
WASHINGTON, D.C. 20361

PLUG

SIZE	CODE IDENT NO	NAVAIR DRAWING NO.
D	30003	837AS255

SCALE: 4/1 SHEET 1 OF 1

CLASSIFICATION OF CHARACTERISTICS (DOD-STD-2101)
CRITICAL - NONE
MAJOR - NONE
MINOR - ALL CHARACTERISTICS

REVISIONS			
REV	DESCRIPTION	DATE	APPROVED

NOTES:

1. INTERPRET DRAWING IN ACCORDANCE WITH MIL-STD-100.
2. UNLESS OTHERWISE SPECIFIED:
   REMOVE ALL BURRS AND BREAK SHARP EDGES .010 MAX.
   SURFACE FINISH AS DRAWN.
3. HEAT TREAT PER MIL-H-6088 TO T6 TEMPER. ALL DIMENSIONS APPLY AFTER HEAT TREATMENT. IF MATERIAL IS AT T6 TEMPER NO FURTHER HEAT TREATMENT IS NECESSARY.
4. THERE SHALL BE NO TEARS, FOLDS, SEAMS OR INCLUSIONS AFTER THE DRAWING OPERATION.

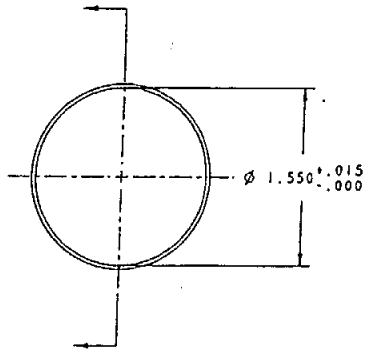

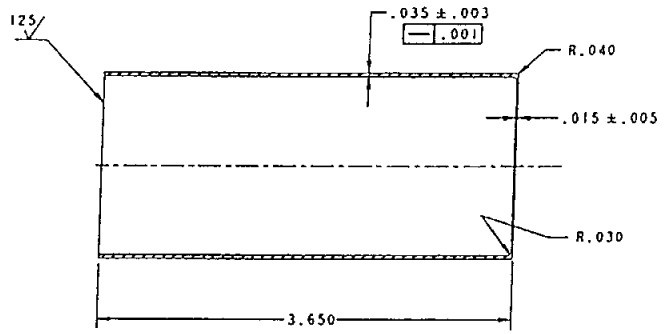

DISTRIBUTION STATEMENT C:
DISTRIBUTION AUTHORIZED TO U.S. GOVERNMENT AGENCIES AND THEIR CONTRACTORS, ADMINISTRATIVE OR OPERATIONAL USE, 3-09-92. OTHER REQUESTS FOR THIS DOCUMENT SHALL BE REFERRED TO COMMANDER, INDIAN HEAD DIVISION, NAVAL SURFACE WARFARE CENTER, 101 STRAUSS AVENUE INDIAN HEAD, MD. 20640-5035.

FIND NO	QTY REQD	CODE IDENT	PART NO. OR IDENTIFYING NO	SPECIFICATION NO.	NOMENCLATURE OR DESCRIPTION	MATERIAL OR NOTE

PARTS LIST

NEXT ASSY.	USED ON
APPLICATION	

UNLESS OTHERWISE SPECIFIED DIMENSIONS ARE IN INCHES.
TOLERANCE: ANGLES ± ——
FRACTIONS ± ——
2 PLACE DECIMALS ± ——
3 PLACE DECIMALS ± .010
MATERIAL:
ALUMINUM ALLOY, 6061 PER QQ-A-250/11

INDIAN HEAD DIVISION NAVAL SURFACE WARFARE CENTER INDIAN HEAD, MD 20640-5035

APPROVALS	DATE
PREP: NSWCIH	03MAR92
CHK:	16 MAR 92
ENGR:	16 MAR 92
	16 MAR 92

APPROVED FOR NAVAIR 18 MAR 92

DEPARTMENT OF THE NAVY
NAVAL AIR SYSTEMS COMMAND
WASHINGTON, D.C. 20361

CASE

SIZE	CODE IDENT NO	NAVAIR DRAWING NO.
D	30003	837AS248

SCALE: 2/1 SHEET 1 OF 1

CLASSIFICATION OF CHARACTERISTICS (DOD-STD-2101)
CRITICAL - NONE
MAJOR - NONE
MINOR - ALL CHARACTERISTICS

REVISIONS			
REV	DESCRIPTION	DATE	APPROVED

NOTES:

1. INTERPRET DRAWING IN ACCORDANCE WITH MIL-STD-100.
2. BREAK ALL SHARP EDGES.
3. MATERIAL: STEEL, SHEET (1095) PER MIL-S-7947. HEAT TREAT IN ACCORDANCE WITH MIL-H-6875 TO RHN C-38 TO C-42. FINISH SHALL BE IN ACCORDANCE WITH DOD-P-16232, TYPE Z, CLASS 2.

   ALTERNATE MATERIAL: AUSTENTIC STAINLESS STEEL, PER ASTM A666, TYPE 301 OR TYPE 302, FULL HARD TEMPER, 41 MINIMUM ROCKWELL C OR 81.5 MINIMUM ROCKWELL 15N. PASSIVATE IN ACCORDANCE WITH QQ-P-35.

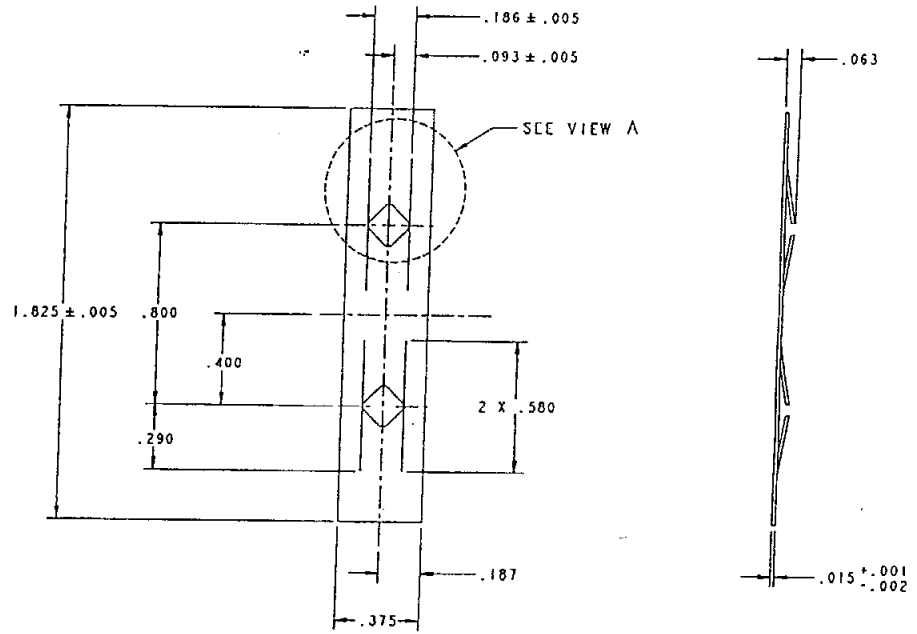

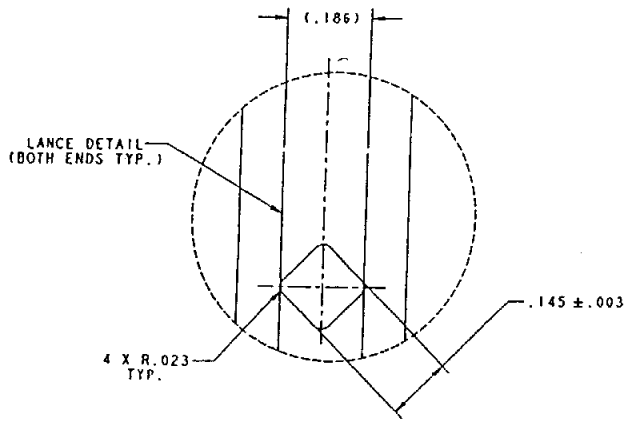

VIEW A
SCALE: 8/1
2 PLACES

DISTRIBUTION STATEMENT C:
DISTRIBUTION AUTHORIZED TO U.S. GOVERNMENT AGENCIES AND THEIR CONTRACTORS, ADMINISTRATIVE OR OPERATIONAL USE, 3-09-92. OTHER REQUESTS FOR THIS DOCUMENT SHALL BE REFERRED TO COMMANDER, INDIAN HEAD DIVISION, NAVAL SURFACE WARFARE CENTER, 101 STRAUSS AVENUE INDIAN HEAD, MD. 20640-5035.

FIND NO	QTY REQD	CODE IDENT	PART NO. OR IDENTIFYING NO	SPECIFICATION NO.	NOMENCLATURE OR DESCRIPTION	MATERIAL OR NOTE

PARTS LIST

NEXT ASSY.	USED ON
APPLICATION	

UNLESS OTHERWISE SPECIFIED DIMENSIONS ARE IN INCHES.
TOLERANCE: ANGLES ± 2°
FRACTIONS ± —
2 PLACE DECIMALS ± .02
3 PLACE DECIMALS ± .010
MATERIAL: 3

INDIAN HEAD DIVISION
NAVAL SURFACE WARFARE CENTER
INDIAN HEAD, MD 20640-5035

APPROVALS	DATE
PREP: NSWCIH	10MAR92
CHK:	
ENGR:	

APPROVED FOR NAVAIR

DEPARTMENT OF THE NAVY
NAVAL AIR SYSTEMS COMMAND
WASHINGTON, D.C. 20361

RETAINER

SIZE	CODE IDENT NO.	NAVAIR DRAWING NO.
D	30003	837AS256

SCALE: 4/1 SHEET 1 OF 1